GP125i/150i/180i
Maintenance Manual

www.royalalloy.com

Dear users:

Thank you for choosing your RoyalAlloy**GP125I/150I/180I**scooter. In order to make you drive more safe and comfortable, please read carefully and fully understand the contents of this manual.

This manual explains the main information, such as the structure, characteristic, basic inspection and maintenance, and thestructure and maintenance of EFI etc for your scooter, so that you can carry out regular maintenance operations on your vehicle. As it is not possible to include complete mechanical notions in this manual, users should have basic mechanical knowledge. Without this knowledge, repairing or checking the vehicle may be inefficient or even dangerous. So you should be extremely cautious so as not to damage components or injure individuals. If you can't complete the repair and maintenance independently, please contact the local dealer.

Company reserves the right to make any changes due to the renewal of the product. If there is any change, no notice will be made, please refer to the real scooters. The main technical modifications and changes in repair procedures are communicated to all Sales Outlets and its International Subsidiaries. These changes will be introduced in the subsequent editions of the manual.

The important information below will appear in this manual:

⚠ **CAUTION**Refers to specific procedures to carry out for preventing damages to the vehicle.

⚠ **WARNING**Refers to specific procedures to carry out to prevent injuries to the repairer.

Contents

CHARACTERISTICS.....4

TOOLING.....17

MAINTENANCE.....23

ELECTRICAL SYSTEM.....50

REMOVE ENGINE FROM VEHICLE.....58

ENGINE DISASSEMBLY.....80

EFI SYSTEM.....1177

BRAKING SYSTEM.....141

FINAL INSPECTION.....162

CHARACTERISTICS

Maintenance rules

Vehicle identification

Specifications

Transmission system description

Lubrication system description

Fuel system description

Chassis and suspensions system

Front and Rear wheel description

Braking system description

Electrical system description

Tightening torque

Maintenance rules

1. Use the spareparts and lubricants of our company or recommended by our company, the spare parts and lubricants that are not in conformity with the design specifications of our company may damage the motorcycle.

   Recommended brand model: MOTOREX scooter semi synthetic 4 strokeSAE 10W/40-SJ.

2. Replace spring washers, washers, O-rings (OR), cotter pins and circlips with new parts when reassembling components.
3. When tightening nuts and screws, start either from the components with the largest diameter or from the innermost components, proceeding diagonally. Tighten nuts and screws in successive steps to the specified torque.
4. After decomposition, clean parts in clean solvents. Lubricate any smooth surface before assembly.
5. After reassembling, check all parts to install and operate correctly.
6. Dredge all cables and harnesses.
7. Please go to our authorized dealership for repair, unless the owner has special tools and maintenance data and is a qualified mechanist.

Vehicle identification

Chassis number is stamped on the frame right side frame rail.

Engine number is stamped on the rear of the crankcase assembly.

CAUTION These numbers are necessary for vehicle registration identification, and changing the identification number may be severely punished by the law, especially if the revision of the chassis number will be invalid even if the warranty is invalid

Specifications:

Vehicle data		Engine data	
Model	GP125i GP150i GP180i	Engine model	1P52QMI (125) 1P57QMJ (150) 1P61QMK (180)
Overall size (mm)	1845×670×1115	Engine idle speed	1800±100rpm
Wheel base (mm)	1390	Engine type	1 cylinder, S, horizontal
Saddle height (mm)	780	Bore × stroke (mm)	52.4*57.8 (125) 57.4*57.8 (150) 61*57.8 (180)
Minimum ground clearance (mm)	145	Total displacement (mL)	125 (125) 150 (150) 169 （180）

Net weight (kg)	142	Compression ration	10.5:1 (125) 10.4:1 (150) 10.2:1 (180)
Max loading weight (kg)	210	Max net power, rate (kW/r/min)	7.1KW/7500rpm(125) 8.3KW/8000rpm(150) 8.8KW/7500rpm (180)
Fuel tank capacity (L)	10.5	Max net torque, rate (Nm/r/min)	9.2Nm/7000rpm(125) 11Nm/6000rpm(150) 12.5Nm/5500rpm(180)
Front tyre size/ Inflating pressure	110/70-12 /32 PSI	Start mode	Electric
Rear tyre size/ Inflating pressure	120/70-12 /34 PSI	Ignition mode	EFI(DELPHI)
Front brake	Disc brake	Valve clearance(mm)	Intake:0.12 Exhaust:0.12
Rear brake	Disc brake	Lubrication type	Pressure/splash
Battery capacity	12V 9Ah	Spark plug	NGK CR7HSA

Horn	90-100dB(A)	Clutch	Automatic centrifugal dry clutch
		Variator	Continuous, automatic

Transmission system description

Item	Standard
Transmission	CVT with V belt + final reduction unit
Gear ratio	2.363～0.765（125/150/180）
Gear ratio	45/13*41/15=9.46（125/150/180）
Engine wheel total ratio	7.24～22.354（125/150/180）

Lubrication system description

Item		Standard
Engine oil 1000ml Brand name: SAE10W-40-SJ	Change Engine oil	850ml
	Change Engine oil and engine oil filter	950ml
	Dismantle engine, inject oil	1000ml

Transmission oil 200ml Brand name: 75W-80	Change transmission oil	150ml
	Dismantle engine, inject oil	180ml

Fuel system description

Item	description
Fuel number	Unleaded fuel 92 or higher
Fuel tank capacity	10.5L

Chassis and suspensions system

Item	Standard
Steering rake angle	26.30°
Front suspension	Adjustable preloading, hydraulic action telescopic fork
Front suspension travel	70mm
Rear suspension	Hydraulic double-acting shock absorber and adjustable preloading

Rear suspension travel	85mm
Steering rake angle	26.30°

Front and Rear wheel description

Item	Standard
Wheel Rims material	Aluminium alloy
Front tyre	Tubeless 110/70-12
Rear tyre	Tubeless 120/70-12
Front tyre inflation pressure	32/220(Psi/kPa)
Rear tyre inflation pressure	34/234(Psi/kPa)

Braking system description

Item	Standard
Braking system	ABS or CBS
Front brake	Ø220mm disc brake with hydraulic transmission

Rear brake	Ø220mm disc brake with hydraulic transmission
Brake fluid	FMVSS DOT4+

Electrical system description

Item		Standard
Battery capacity		12V-9Ah
Fuses		20-10-10A
(Permanent-magnet) Alternator		12 V - 200W at 7000 rpm
Spark plug		NGK CR7HSA
Bulbs/ warning lights	High-/low-beam bulb	Square lamp:12V 35/35W Round lamp:LED
	Front position lamp	LED
	Tail light bulb	LED

	License plate light bulb	LED
	Brake lamp	LED
	Front and rear turn indicator bulbs	LED
Speedometer	Instrument panel lighting bulb	LED
	Turn indicator warning light	LED
	High-beam warning light	LED
	Engine oil pressure warning light	LED
	Low fuel warning light	LED
	EFI check warning light	LED

Tightening torque

Vehicle part:

Fastening parts	Number	Thread specification	Torque Nm
Nut fixing engine hanger	1	M10	45
Nut fixing engine	1	M10	45
Front wheel axle nut	1	M12	60
Rear wheel axle nut	1	M14	100
Upper screw fixing rear shock absorber	2	M10	40
Lower screw fixing rear shock absorber	2	M8	25
Upper screw fixing front shock absorber	2	M6	12
Lower screw fixing front shock absorber	2	M12	60
Locking nut fixing direction column	1	M25	70
Nut fixing handlebar	1	M10	45
Screw fixing front brake disc	3	M8	25

Fastening bolt fixing rear wheel	5	M12	60
Screw fixing rear brake disc	5	M8	25
Reference bolts for other specifications: GB1231-2006 bolt torque standard			

Engine part:

Fastening parts	Number	Thread specification	Torque Nm
Cylinder head fixing nut	4	M8	25～30
Cylinder head fixing bolt	2	M6	8～12
Gear box cover fixing screw	7	M8	25～30
Timing sprocket screw	2	M6	8～12
Oil filter cover	1	M30	25～30
Combined box screw	3	M6	8～12
Intake manifold fixing screw	3	M6	8～12
Crankcase oil releasing screw	1	M12	33～38
Gear box oil releasing screw	1	M8	15～20
Gear box oil Injection hole bolt	1	M8	15～20

Front clutch nut	1	M12	60～70
Rear clutch nut	1	M12	60～70
Generator rotor fixing screw	1	M12	60～70
Cylinder temperature sensor	1	M8	6～9
Spark plug	1	M10	9～12
Fan fixing bolt	1	M6	9～12
Reference bolts for other specifications: GB1231-2006 bolt torque standard			

TOOLING

1. Special tools(The following tools are restricted to professional technicians only,consumers must not operate without authorization):

No.	Name	Tool number	Picture
1	Valve spring compressor	Z01	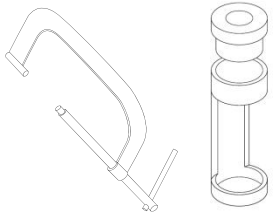

2	Tightener Tool	Z02	
3	Clutch Drive Wheel and Drive Wheel Limiter	Z03	
4	Shaft bearing punch	Z06.1---Z06.8	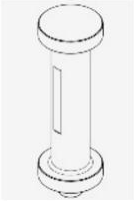

5	Oil seal punch	Z07.1--Z07.9	
6	Flywheel extractor	Z04	
7	Spark plug sleeve	Z05	

8、	Fault diagnosis instrument	Z08	
9、	Shock absorber adjusts handle	Z09	

2. General tools

No.	Name	Picture
1	“T” sleeve: 8#. 10#. 12#. 14#	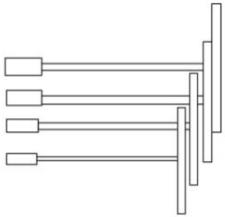

2	Tool case 1	
3	Tool case 2	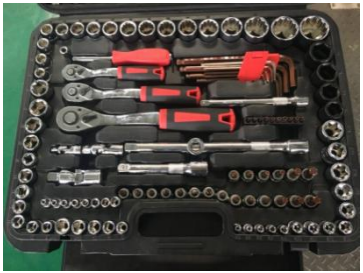
4	Spring pliers	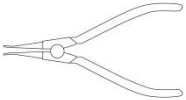

5	Screwdriver	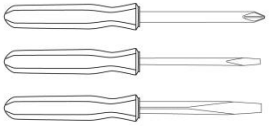
6	Pliers	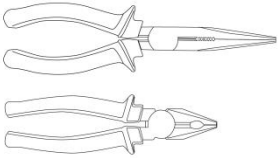
7	Nylon hammer	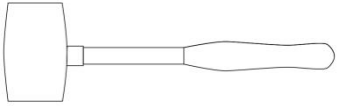
8	Multimeter	

MAINTENANCE

Precautions for Maintenance

Maintenance cycle

Basic maintenance

1. **Spark plug**
2. **Check and replace the gear oil**
3. **Check and replace the engine oil**
4. **Throttle grip adjustment**
5. **Clean the air filter**
6. **Braking system**
7. **Headlight inspection and adjustment**

Precautions for Maintenance

1. Before the maintenance, put the motorcycle on the ground and support the main stand.

2. Ensure that the maintenance environment is well ventilated.

3. Prepare the worktable (under the engine) and tools.

4. For threaded fasteners or seals, if not specified, counterclockwise should be loosened and clockwise should be tightened.

Maintenance cycle

I: INSPECT & CLEAN, ADJUST, LUBRICATE OR REPLACE IF NECESSARY

C: CLEAN R: REPLACE

The running in period of motorcycle is 1000km. For this reason, the driving speed should not exceed 80km/h within the mileage 1000km.

km \ mileage		1000	5000	10000	15000	20000	25000	30000
lubrication system	Engine oil	New 300R	R	R	R	R	R	R
	Engine oil filter	New 300R		C		C		C
	Gear oil	New 300R			R			R
Fuel	Fuel filter net			R		R		R
Air intake system	Air filter /CVT sponges		C	C	C	R	C	C
	Intake manifold and fixed bolt	I	I	I	I	I	I	R
	Air lines	I	I	I	I	I	I	R
Electric injection system	Throttle assembly			C		C		C
	Injection nozzle					I		I
	High pressure oil pipe			I				R
	Cylinder temperature sensor					I		I

	Oxygen sensor				I			I
	Ignition coil			I		I		I
CVT/ clutch system	Drive belt				I			R
	Clutch				I			R
	Front and back Belt fixed, moving plate				I			R
	PuLiZhu				I			R
Braking system	Brake Liquid	I		I		I		I
	Brake tubing	I		I		I		I
	Brake disc	I		I		I		I
Valve gap					I			I
Spark plug				R		R		R
Control drawing line	Throttle line, brake line			I		I		I
Front and rear shock absorption				I		I		I
Wheels / tires		I		I		I		I
Head tube bearing		I		I		I		I
Battery				I		I		R

Safety fastener of important bolt and nut of car body	I	I	I	I	I	I	I

Basic maintenance

1. Spark plug

A. Removal and cleaning

WARNING In order to avoid the risk of ignition, please let the engine and silencer cool down before performing the following operations.

(1)Park the vehicle on its main stand, unscrew and remove the 3 screws of right side cover (shown no.1), remove the right side cover (shown no.2),and find the spark plug suppressor cap (shown no.3).

(2)Remove the spark plug suppressor cap (shown no.3).

（3）Clean off any trace of dirt from the spark plug base by using compressed air. Then unscrew it using the spanner supplied in the toolkit and remove it from the engine, being careful not to let dust or any other substance enter into the cylinder.

（4）Check that the spark plug electrode and centre porcelain (shown no.4) are free of carbon deposits or signs of corrosion. If necessary, clean using suitable spark plug cleaners, a wire and/or metal brush. Blow with a strong air blast to avoid removed dirt getting into the engine.

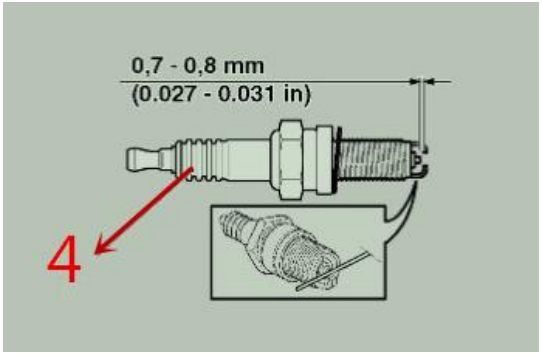

（5）)Check the electrode gap with a feeler gauge. This gap should be 0.7 - 0.8 mm, adjust it if necessary by carefully bending the ground electrode.

B. Assembly fastening

(1)Make sure that the washer is in good conditions. Once the washer is fitted, manually screw the spark plug using spark plug sleeve (Z05).

(2)Ensure that the spark plug suppressor cap is fitted securely, so that it will not get detached when exposed to engine vibrations.

C. Technical data

Standard spark plug: NGK CR7HSA

Spark plug electrode gap: 0.7 - 0.8 mm

Locking torques: 10Nm (7.38 lb ft)

⚠ CAUTION

1. If spark plug insulation material is broken and electrode corrosion is serious, spark plugs need to be replaced.

2. Tighten the spark plug correctly. Otherwise, the engine may overheat and be damaged. Use only the recommended type of spark plug; otherwise, engine duration and performance could be compromised.

2. Check and replace the gear oil:

⚠ WARNING In order to avoid the risk of ignition, please let the engine and silencer cool down before performing the following operations.

A. Check

(1)Park the vehicle on its main stand, unscrew and remove the oil injection hole screw (shown no.1), unscrew and remove the oil drain screw (shown no.2), then drain off the oil (get a collecting container before carrying out these operations).

(2)Check that the quantity is within the specified limits (≥ 150ml), top-up with the necessary quantity if required. Visual oil color, if black or iron filings, please immediately change the oil.

(3)Tighten the drain screw (shown no.2). Locking torques: 15--20Nm.

(4)Fill the oil into Gear box from the oil injection hole screw (shown no.1), tighten the screw (shown no.1).

Locking torques: 15--20Nm.

(5)Wipe the oil of the surface with a rag to confirm no leakage.

⚠ CAUTION In the case of insufficient lubrication (less oil), oil deterioration (long running time), and no use of recommended oil, it will accelerate the wear of moving parts, and produce irreparable harm.

B. Replacement

The operation steps are the same as the above A inspection process.

3. Check and replace the engine oil

⚠ WARNING In order to avoid the risk of ignition, please let the engine and silencer cool down before performing the following operations.

A. Check the quantity of engine oil

(1)Start the engine, let it idle during a few minutes and then switch it off.

(2)Park the vehicle on its main stand, keeps the vehicle in an upright and level position. Wait at least five minutes to let the oil that is inside the engine to run back down into the crankcase.

(3)**Remove the left and right cover**

(4)Unscrew and remove oil cap/dipstick (shown no.1).

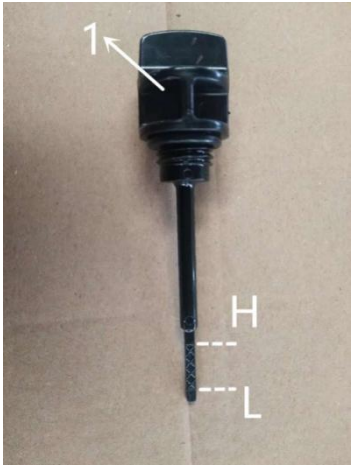

(5)Clean the oil of oil cap/dipstick (shown no.1), insert the oil cap/dipstick (shown no.1) into the injection port, but do not screw in. Remove again and check for the correct oil level, it must be between the reference mark “H” and “L”. Visual oil color, if black or iron filings, please immediately change the oil.

(6)If the level is not close to the mark “H”, pour a small quantity of oil and wait approximately five minutes. Then check the oil level by step (5) until it close to the mark “H”, screw and tighten the oil cap/dipstick (shown no.1).

(7)Wipe the oil of the engine surface with a rag to confirm no leakage.

⚠ CAUTION In the case of insufficient lubrication (less oil), oil deterioration (long running time), and no use of recommended oil, it will accelerate the wear of moving parts, and produce irreparable harm.

B. Replacement

(1)Park the vehicle on its main stand, unscrew and remove oil cap/dipstick (shown no.1).

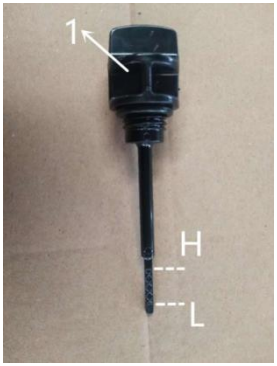

(2)Unscrew and remove the oil release bolt of left crankcase (shown no.2), drain off the oil (get a collecting container before carrying out these operations).

(3) Oil filter screen cleaning or replacement : according to the maintenance cycle to determine whether to implement.

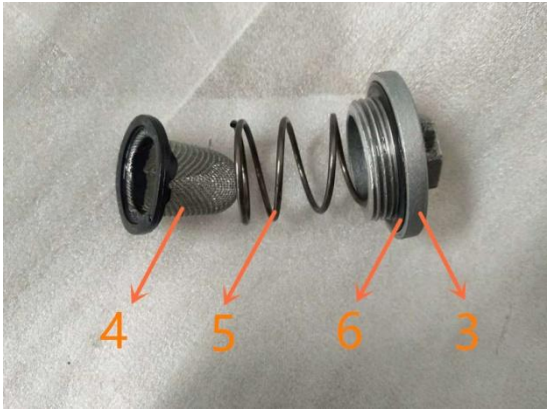

Unscrew and remove the screen cover(shown no.3), take off the oil filter screen(shown no.4),clean impurities of the filter screen and check for damage to the filter screen,if damaged, replace immediately. Fit a new oil filter screen and fit the springr(shown no.5),check the seal ring(shown no.6),screw and tighten the screen cover(shown no.3). Locking torques: 25--30Nm

(4) screw and tighten the bolt((shown no.2).Locking torques: 33--38Nm

(5) Pour approx. 950mL(cleaning filter screen) or 850mL(uncleaning filter screen) engine oil through the fill opening of oil cap/dipstick (shown no.1).

6) Screw and tighten oil cap/dipstick (shown no.1).

(7) Start the engine and let it run for several minutes. Stop the engine and let it cool down.
(8) Check engine oil level again whether to meet the requirements.

4. Throttle grip adjustment

The empty travel of the throttle grip (shown no.4) should be 2-3mm, measured at the throttle trim. If this is not so, proceed as follows:

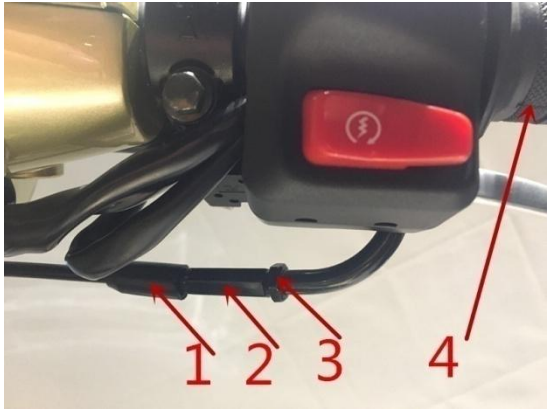

(1)Slide off the protection cover(shown no.1).

(2)Loosen the lock nut(shown no.3).

(3)Turn the set screw (shown no.2) so as to obtain the specified value.

(4)After the adjustment, tighten the lock nut (shown no.2) and check the empty travel again.

(5)Refit the protection cover (shown no.1).

5. Clean the air filter

The air filter element used in this scooter is a polyurethane foam +paper element. If the filter element has become clogged with dust, intake resistance will increase with a resultant decrease in power output and increase in fuel consumption due to the richer fuel/air mixture. Check, clean and replace the air filter element according to the maintenance cycle.

(1)Park the vehicle on its main stand. Unscrew the 3 screws (shown no.1) to remove the left side cover .

(2)Unscrew and remove the 9 screws (shown no.2) , Remove the filter box cover .

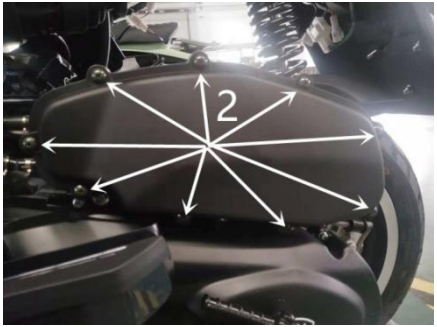

(3)Unscrew and remove the 2screws (shown no.3) ,take off the filter element (shown no.4),Split the filter element into paper filter element (shown no. 5) and foam filter element (shown no 6).

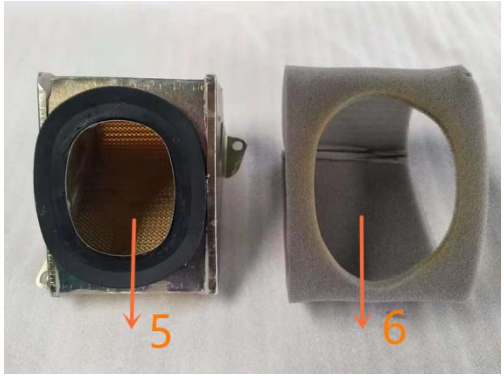

(4)Clean and check the paper filter element (shown no. 5) ,replacement if necessary.

(5)Foam filter element (shown no. 6) cleaning:

- Fill a container of a suitable size with non-flammable water soluble cleaning solvent. Immerse the filter element in the solvent and wash it clean.
- Squeeze the solvent out of the washed filter element by pressing it between the palms of both hands. Do not twist and wring the filter element as this will lead to tearing.
- Rinse in warm free running water and dry filter element by using compressed air or warm air dryer.
- Immerse the filter element in clean engine oil, squeeze excess oil from the filter element to leave it slightly wet with the oil.

- Reinstall the cleaned air filter element in reverse order of removal. Be absolutely sure that the filter element is securely in position and is sealing properly.

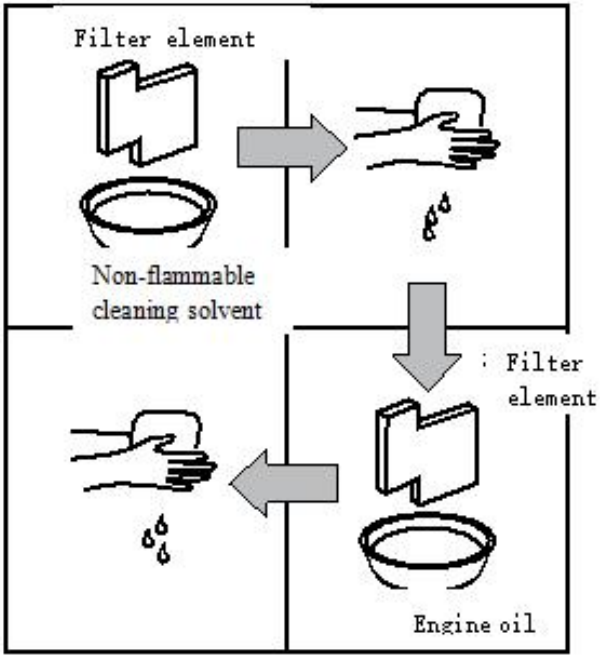

CAUTION Without the filter element, running the engine will increase engine wear.

(6)Take off the foam sponge（shown no. 7）,immerse the filter element in the non-flammable water soluble cleaning solvent to clean,Squeeze the solvent out of the washed filter element by pressing it between the palms of both hands.

(7)After cleaning the air filter body, assemble in reverse order.

7. Braking system

A. Check and top-up the brake fluid

(1)Park the vehicle on its main stand.

(2)Check that the level in the reservoir is over the mark “LOWER”. If the fluid does not reach the mark “LOWER”, check brake pads and disc for wear. If the pads and/or the disc do not need replacing, top-up the fluid.。

Top-up

(a)Undo the2 screws (shown no.1) to remove the brake pump cover (shown no.2).

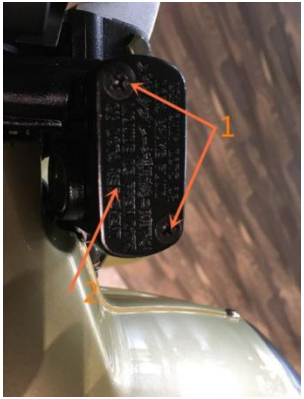

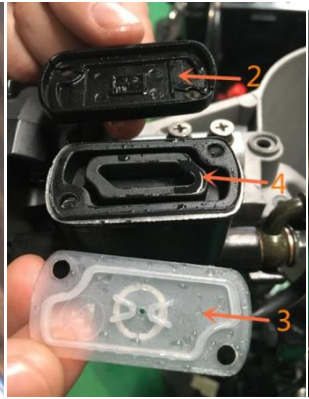

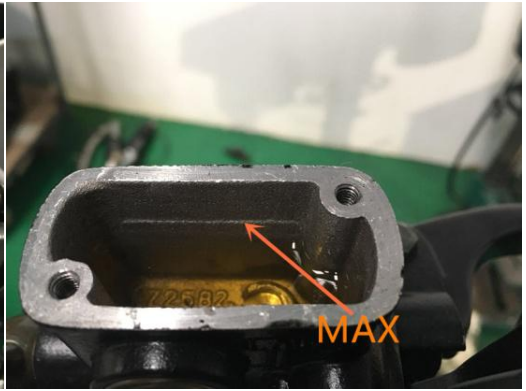

⚠ CAUTION In order to avoid the risk of brake fluid overflow, the brake handle cannot be held after the 2 screws are removed and the pump cover is removed mainly.

(b) Top-up the fluid to reach the mark “MAX”.

⚠ CAUTION

1. Only when the friction shoe is new, the liquid level reaches the mark "MAX", the liquid level of the brake fluid will gradually decrease with the wear of the friction shoe.

2. WHEN TOPPING-UP, DO NOT EXCEED THE “MAX” LEVEL MARK WHEN BRAKE PADS ARE WORN AS YOU RISK SPILLING FLUID WHEN CHANGING THE BRAKE PADS.

(c)Assemble the brake pump cover and the 2 screws (shown no.1) in sequence of Figure 4, 3, and 2.

B. Check ABS system(if the vehicle has ABS)

Turn on the key, the instrument ABS indicator lights on, until the front and rear wheels move at the same time, the ABS lights will go out.

If the ABS indicator is not light or the front and rear wheels move at the same time, the ABS lamp will not extinguish:

1. Check the gap between the front wheel hall sensor (shown no.1) and the front wheel counting gear tray (shown no.2) and the clearance should be0.5--1.6mm. If there is an excess, check and adjust the position of hall sensor (shown no.1).

2. Check the gap between the rear wheel hall sensor (shown no.3) and the rear wheel counting gear tray (shown no.4) and the clearance should be 0.5--1.6mm. If there is an excess, check and adjust the position of hall sensor (shown no.3).

3.Check the resistance for the front wheel hall sensor (shown no.1) and the rear wheel hall sensor (shown no.3), the resistance about 0.4MΩ. If not connected, replace the sensor.

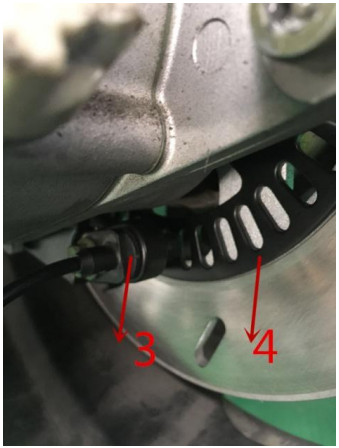

C. Check ABS system(if the vehicle has CBS)

1.Check whether the whole system tubing is damaged, whether the connection is leaking, timely replacement or maintenance.

2.Operate the front wheel lock of the right brake handle. Operate the left brake handle and lock the front and rear wheels. Check and confirm the braking performance.

7. Headlight inspection and adjustment

A. For a quick inspection of the correct aiming of the front light beam

(1)Place the vehicle 10 m from a vertical wall and make sure the ground is level.

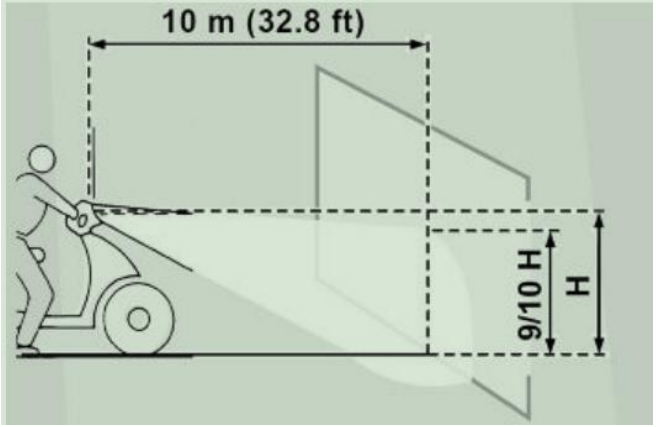

(2) Turn on the high beam light, sit on the vehicle and check that the light beam projected to the wall is a little below the headlight horizontal straight line (about 9/10 of the total height).

(3) Turn on the low beam light, sit on the vehicle and check that the light beam projected to the wall is below the headlight horizontal straight line(0.6-08H,H: total height).

B. Adjust the light beam

Unscrew and but not remove the screw (shown no.1), push the bolt (shown no.1) to the R direction to lower the light beam, push the bolt (shown no.1) to the F direction to raise the light beam.

ELECTRICAL SYSTEM

Components arrangement

15
30
29
28
27
26
16
25
17
24
18
19
20
21
22
23

1.Headlamp 2.Flasher 3. Horn 4. Front turning lamps 5.Side stand switch

6.Cylinder temperature sensor 7. Throttle body 8. Rear turning lamps 9. Taillight 10.Fuel pump

11..Battery 12.Electric lock 13. Left handlebar switch 14.Speedomete 15. Injector

16.STARTER MOTOR 17.Voltage regulator 18. Generator 19. Fuek pump relau 20. Ignition coil

21. Dump valve 22. Oxygen sensor 23.Start-up relay 24.CBS speed sensor

25.Instrument adjustment switch 26.Acceleration grip &right switch 27.Fuel Level Sensor

28.Spark plug 29. ECU 30. Head light relay 31.ABS speed sensor 32. ABS unit

Instrument Panel Indications

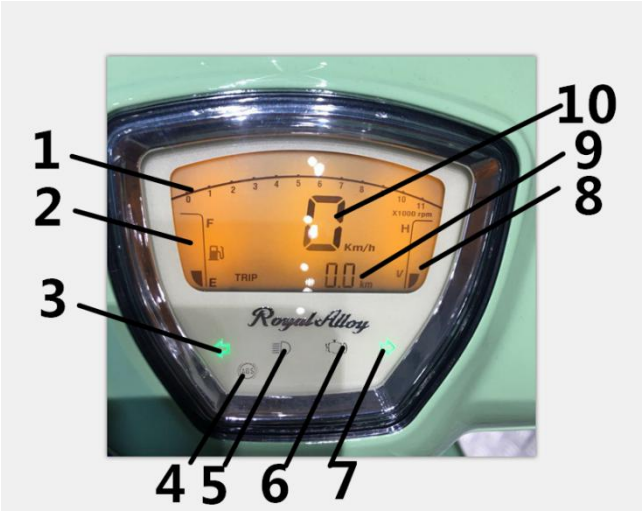

1. Engine RPM Indicator
2. Fuel gauge

3. LH Direction Indicator

4. ABS fault indicator warning light: If this warning light appears during running please consult your dealer；

CBS without the indicator light.

5. High beam/ Low beam indicator

6. Engine fault indicator warning light: If this warning light appears during running please consult your dealer.

7. RH Direction Indicator

8. Battery Indicator

9. Odometer

10.Speedometer

11. “MODE” button functions (See below)，With the ignition key turned to the on position.

A. TRIP METER to ODOMETER to change between displays: Press the “MODE” button then release “MODE” button.

B. Clearing the trip counter history – When the display is TRIP METER, press the “MODE” button and hold for 5 seconds then release when zero is displayed.

C. MPH to KPH change: When the display is ODOMETER, press the “MODE” button and hold for 5 seconds then release.

12. USB port

Harness diagram

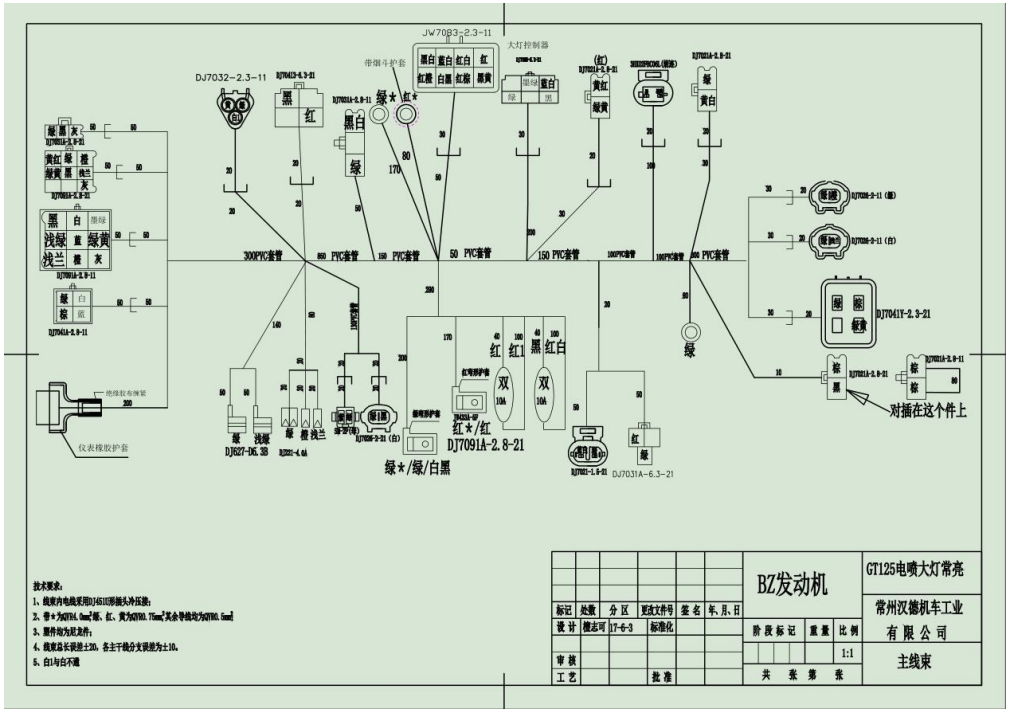

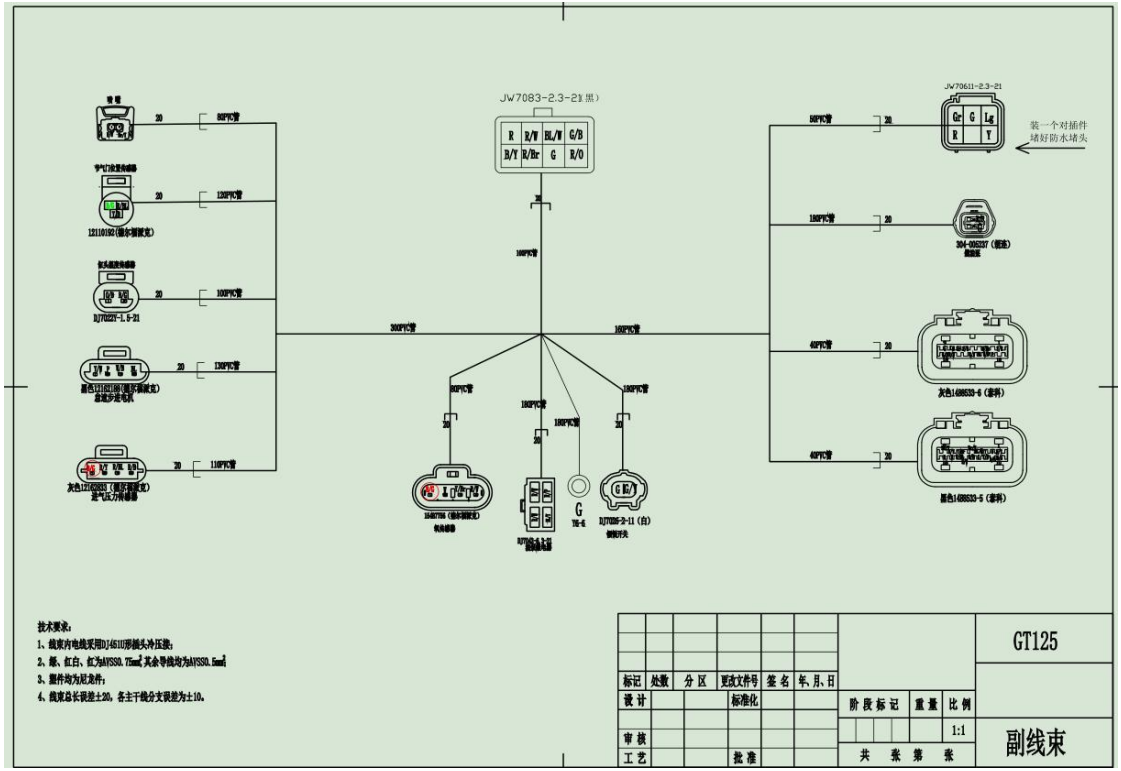
JW7083-2.3-21(黑)
R
R/W
BL/W
G/B
B/Y
R/Br
G
R/O
JW7061-2.3-21
Gr
G
Lg
R
Y
装一个对插件
堵好防水堵头
20
80PVC管
120PVC管
100PVC管
130PVC管
110PVC管
300PVC管
160PVC管
180PVC管
60PVC管
40PVC管
12110192(根本测试宽)
DJ7022Y-1.5-21
灰色12162833(根本测试宽)
进气压力传感器
灰色1486533-6(套料)
灰色1486533-5(套料)
DJ7026-2-11(白)
技术要求:
1、线束内电线采用DJ4511J形插头冷压接;
2、绿、红白、红为AVSS0.75mm²,其余导线均为AVSS0.5mm²
3、塑件均为尼龙件;
4、线束总长误差±20,各主干线分支误差为±10。
标记
处数
分区
更改文件号
签名
年、月、日
设计
标准化
审核
工艺
批准
阶段标记
重量
比例
1:1
共 张 第 张
GT125
副线束

Conceptual diagram

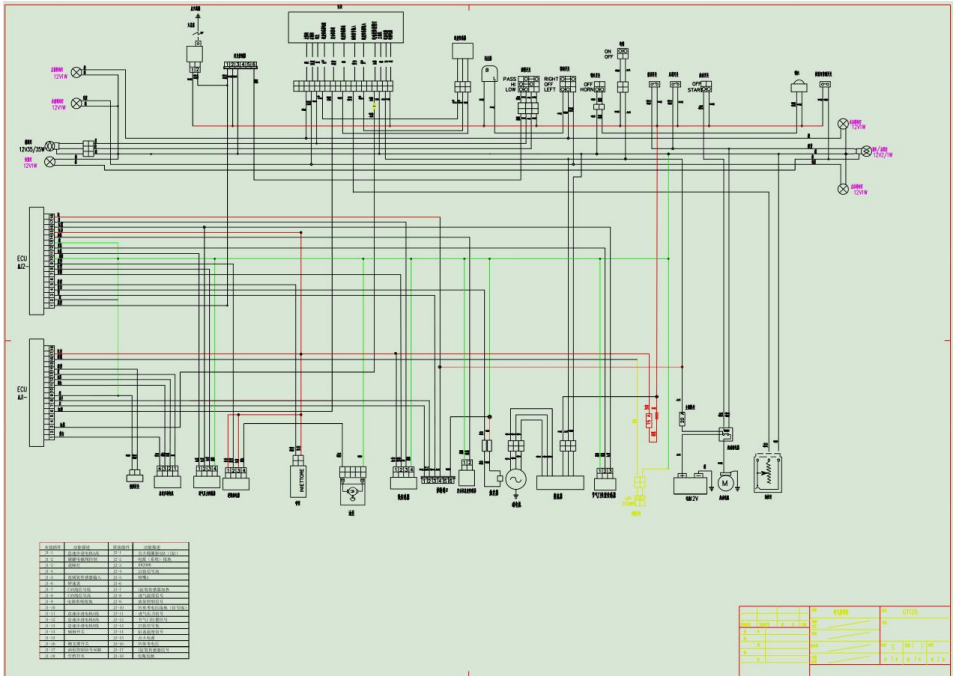

REMOVE ENGINE FROM VEHICLE

CAUTION Before dismantling the engine associated parts, clean the engine thoroughly with a suitable cleaner.

Remove the left and right side cover

1. Undo the 6 screws (shown no.1), remove the right side cover (shown no.2) and left side cover (shown no.3).

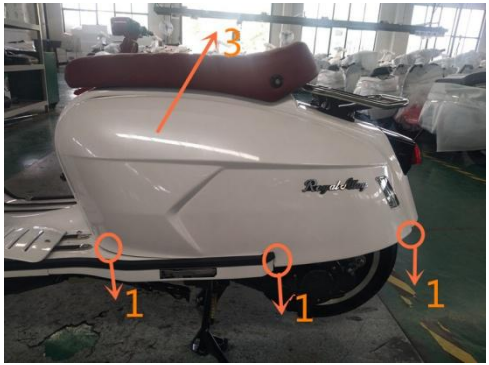

Remove the main cover

1. Unscrew and remove the 2 screws (shown no.2), take down the cushion (shown no.1), unscrew and remove the 2 screws (shown no.3).

2. Unscrew and remove the screw (shown no.4), take down the battery cover (shown no.5),

3.Remove the belt (shown no.14), remove the battery screw "-" (shown no.12), then remove the "+" screw (shown no.13), and remove the battery.

4.Unscrew and remove the 2 screws (shown no.6).

5. Unscrew and remove the 4 screws (shown no.7), take down the hand-holder (shown no.8).

6. Unscrew and remove the 2 nuts (shown no.8), take down the taillight (shown no.9), unscrew and remove the 2 screws (shown no.10), take down the main cover (shown no.11).

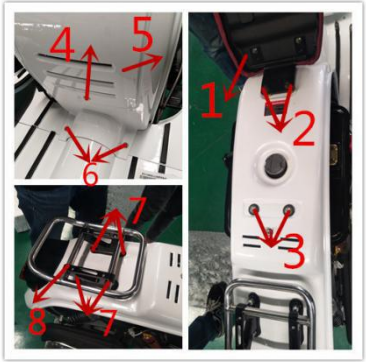
4
5
6
1
2
7
3
8
7

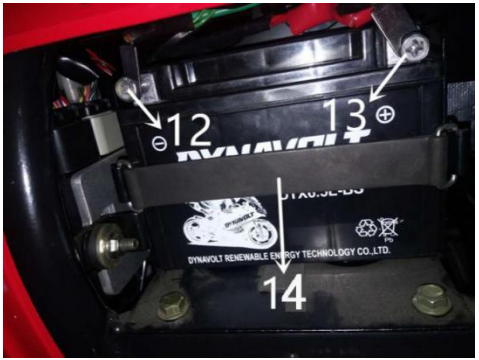
12
13
DYNAVOLT RENEWABLE ENERGY TECHNOLOGY CO.,LTD.
14

9
8
10

11

Remove the Fuel evaporation system

1. Loosen the clamp (shown no.1), pull out the trachea (shown no.2).

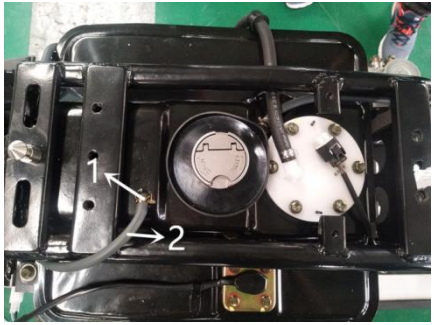

2.Take off the air valve (shown no.3), pull out the bracket (shown no.4), then take off the dump valve (shown no.5) ..

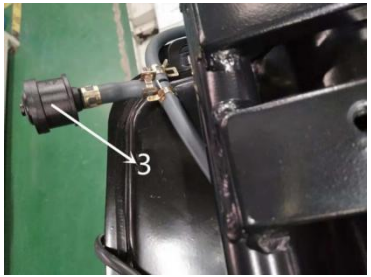

3. Release the desorption pipe clamp (shown no. 6) and the negative pressure pipe clamp (shown no.8) connecting the carbon tank, and pull out the desorption pipe (shown no.7) and the negative pressure pipe (shown no.9).

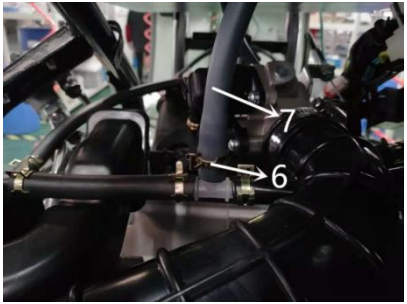

4. Cut the tie band (shown no.10), remove the carbon canister (shown no.11).

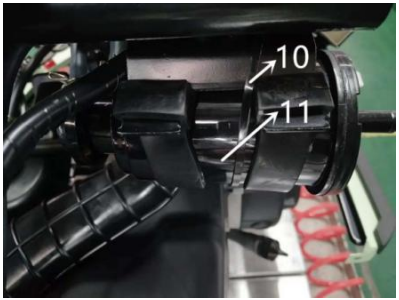

CAUTION The trachea of the system should not be disassembled. If it is disassembled, attention should be paid to the dumping valve (shown no.5). The arrow direction should be connected with "TANK" port of the carbon tan (shown no.11).

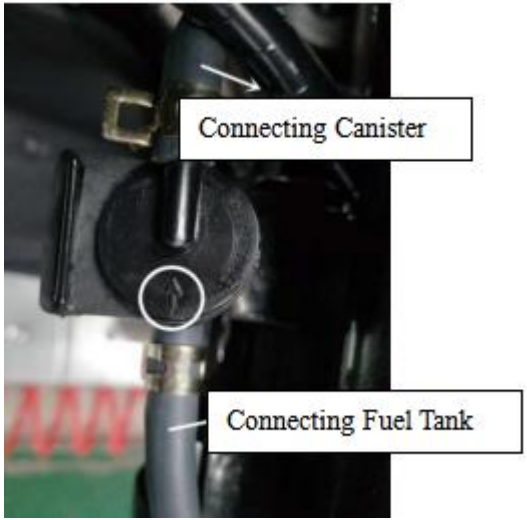

Remove the Fuel tank

1. Disconnect the oil pump plug (shown no.1) and the oil level sensor plug (shown no.2)

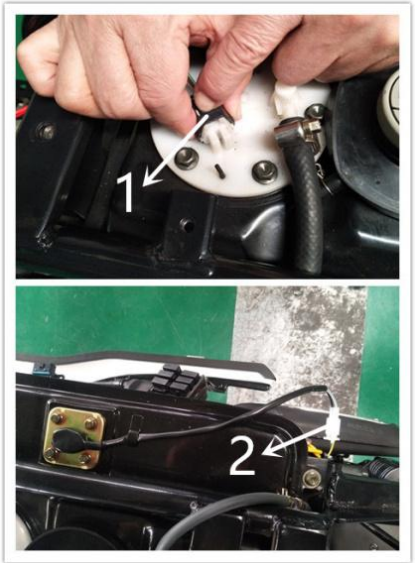

2. Remove two bolts (shown no.3), disconnect plug and remove ECU; Remove two bolts ((shown no. 4), loosen and remove two bolts (shown no. 5), two bolts (shown no.6) , remove battery bracket.

0800 174000
28329656
CF800 XB
MT05
3
4

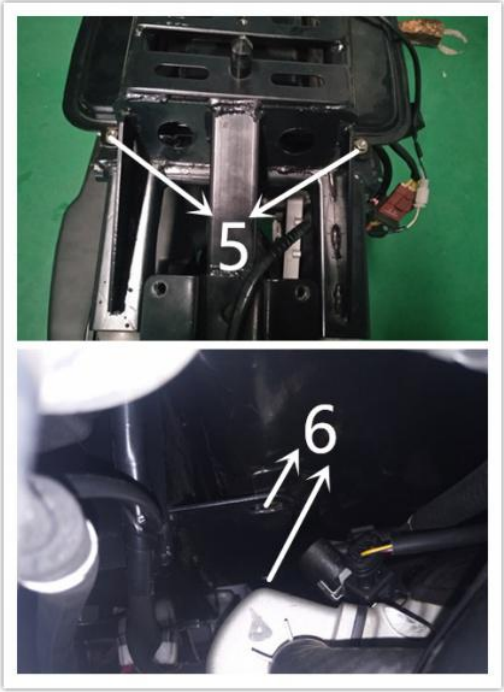
5
6

3. Insert the key (shown no.22) into the tank lock ((shown no.23) and rotate counterclockwise with the lock cover to remove the tank lock. Hold and pull the high-pressure tubing quick connector ((shown no. 25) by hand, if the CBS system removes the tank directly.

Remark: If ABS system is used, remove two bolts that fix ABS unit ((shown no.24). Lower ABS unit and remove fuel tank.

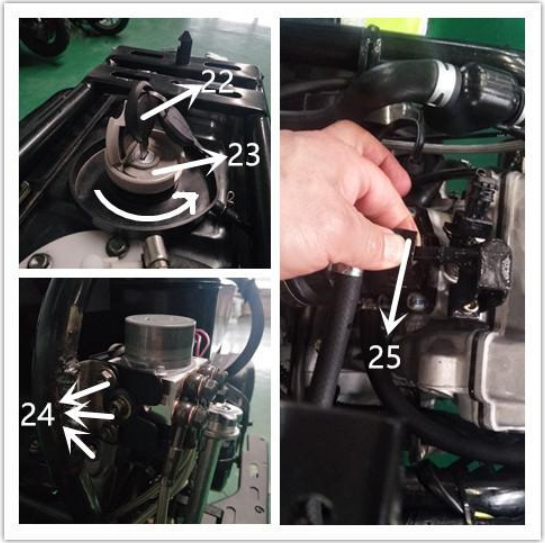

Remove the air filter

1. Remove cylinder head clamp (shown no.1) and gear box pipe clamp (shown no.3), separate air filter pipe (shown no.2 and shown no. 4).

2. Loosen the clamp (shown no.5) and separate the air filter outlet pipe (shown no.6).

3. Loosen the clamp (shown no.7).

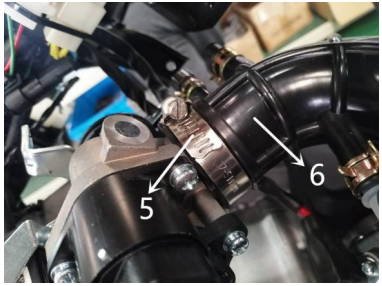

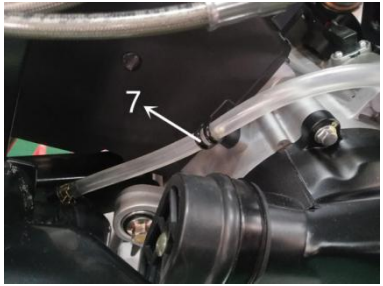

4. Remove the screw (shown no.9), two bolts (shown no.8) and remove the air filter.

Remove the throttle body

1. Disconnect the intake pressure/temperature sensor plug (shown no. 1)

2. Disconnect the throttle position sensor plug (shown no.2)

3. Disconnect the plug of idle stepping motor (shown no. 3)

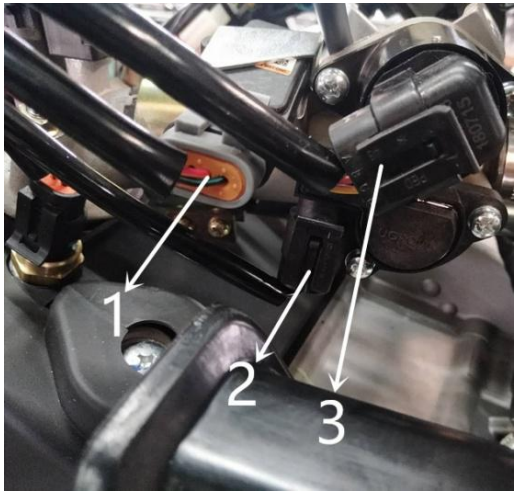

4. Release the nut (shown no.5) from the thread and remove the throttle line (shown no.6).

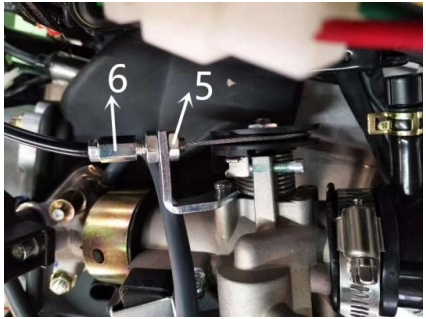

5. Release the two bolts of the rubber sleeve of the intake pipe (shown no.4) and remove the throttle body.

Remove the exhaust system

1. Loosen and remove two bolts (shown no.1) and bolts (shown no.2).

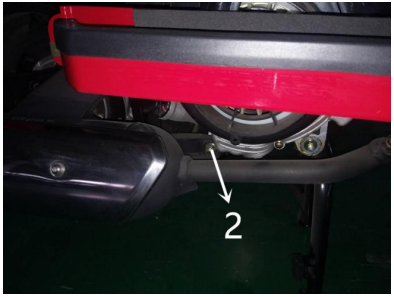

2. Disconnect the plug of the oxygen sensor (shown no.3) and dismantle the oxygen sensor (shown no.4). If it is not necessary, it is not recommended to dismantle the oxygen sensor.

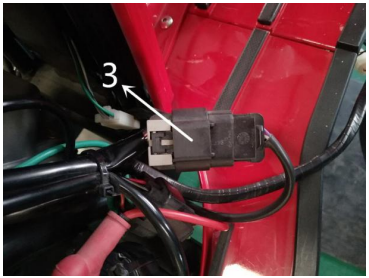

3. Remove two fixed nuts of muffler on cylinder head (shown no. 5) and remove muffler (shown no. 6)

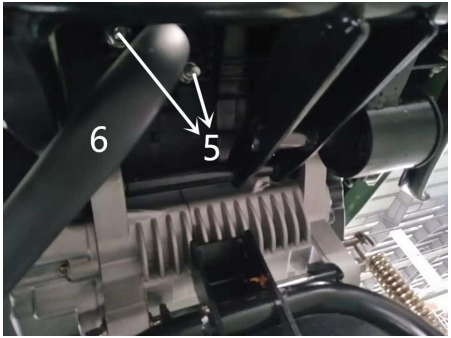

Remove the connection plug

1. Disconnect the fuel injector plug (shown no.1)

2. Disconnect the plug of the cylinder temperature sensor (shown no.2)

3. Cut the strap (Figure 3) and disconnect the magneto plug (shown no. 4 and shown no.5)

4. Disconnect the starting motor wire (shown no. 6)

5. Remove the spark plug cap (shown no.7).

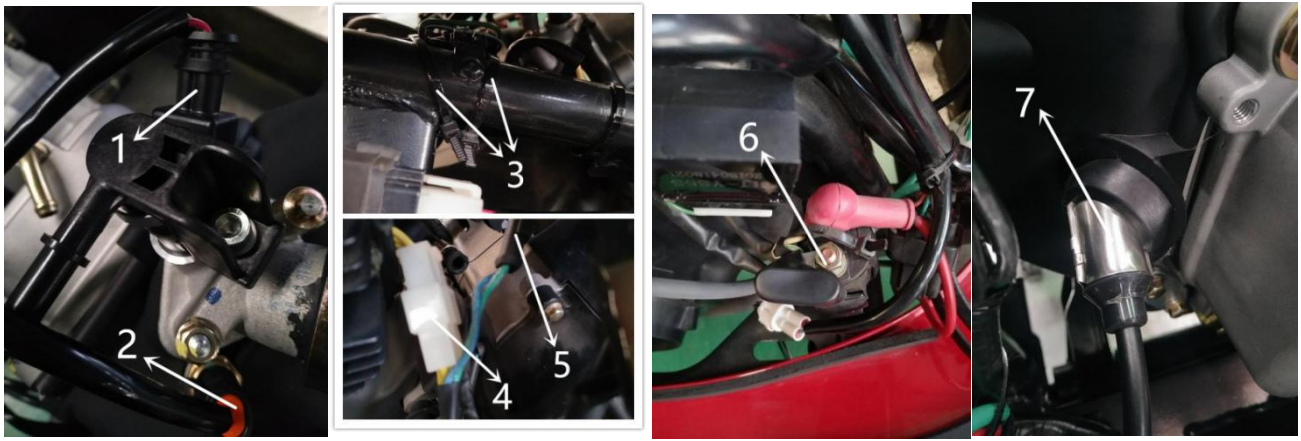
1
2
3
4
5
6
7

Remove the rear wheel

1. Hold the left brake lever (shown no.3), unscrew and remove the 5 screws (shown no.1), and take down the rear wheel (shown no.2).

⚠ CAUTION When reassembling, the bolt thread part of Figure 1 is coated with Loctite 243 thread adhesive, and the tightening torque is 60Nm.

2. Hold the left brake lever (shown no.3), unscrew and remove the nut (shown no.7)

3. Remove tubing clamp bolts (shown no. 4) and clamp fixing bolts (shown no.5). Remove rear brake disc brake pump (shown no. 6) and brake disc (shown no.8).

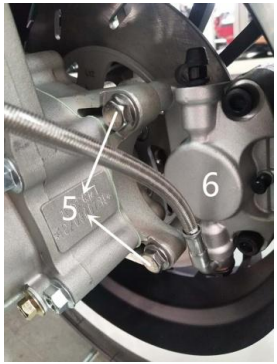

⚠ CAUTION When reassembling, the nut thread part of Figure 7 is coated with Loctite 243 thread adhesive, and the tightening torque is 100Nm.

4. If ABS system: loosen and remove the bolt (shown no.28), remove the sensor (shown no.29).

If CBS system does not have this content.

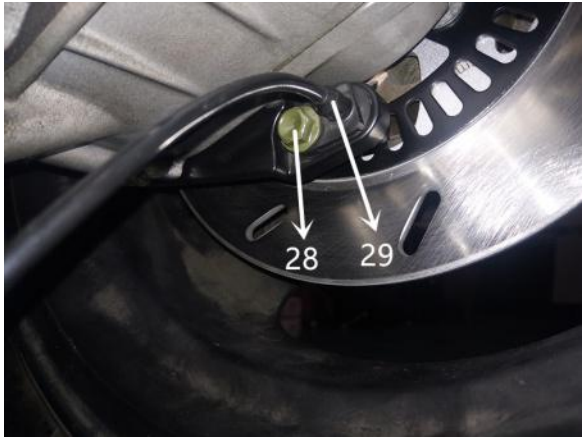

⚠ CAUTION After the sensor 29 is removed, it is temporarily fixed in the proper position of the frame with a tie belt to avoid damage.

Take down the engine

1. Release engine fixed axle nut (shown no.1), do not remove engine fixed axles (shown no.2); Release middle stand axle nuts(shown no. 3), do not remove middle axle (shown no. 4) and middlestand (shown no.5).

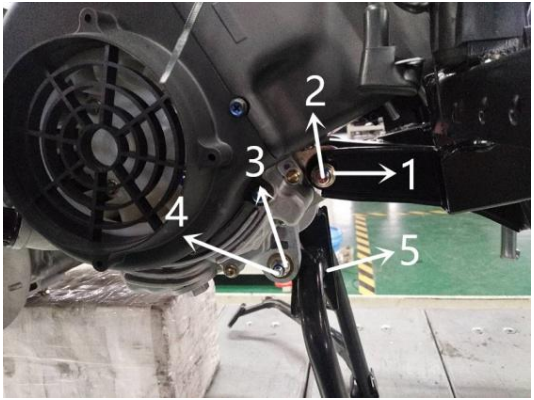

When reassembling:

Torque of engine fixed shaft nut M10: 45Nm

Torque of middle stand axle nut M8:25--30Nm

3. Unscrew and remove the bolts (shown no.6) ,separate the rear shock absorber (shown no.7) from the engine.

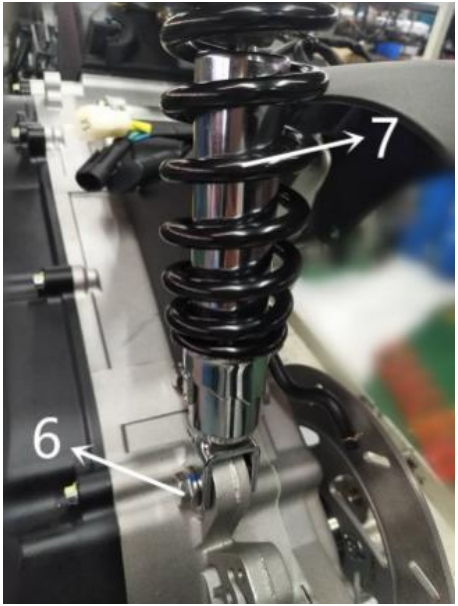

4. Re-confirm that the connecting parts of the engine have been removed, remove the fixed shaft of the engine (shown no.2), remove the engine, remove the mid-brace (shown no.4), and remove the mid-brace (shown no.5).

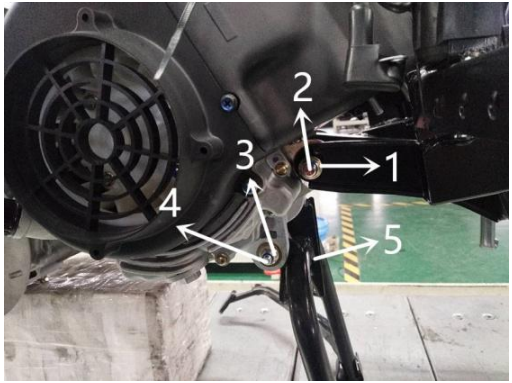

Reassembly

CAUTION Reassembly according to the above reverse procedure, and tighten to the required torque.

ENGINE DISASSEMBLY

CAUTION Before the engine is disassembled, clean it thoroughly with a suitable cleaner to prevent impurities from entering the engine.

Basic principle

1. Replacement of rubber parts

In principle, the engine has been used more than 2 years should replace the rubber parts, such as oil seal, O ring and so on. In 2 years, the crankshaft oil seal and the drive shaft oil seal should have no breakage or aging, otherwise change them.

2. Fastener torque by standard

To the tightening torque of the nut that is not indicated, see 《reference list of tightening torque for screws》 and GB1231-2006 bolt torque standard

3. Principle of bearing assembly

When the bearing is replaced, the principle that the new shaft is pressed into the bearing hole or shaft is not to force

the bearing outer ring and inner ring at the same time. otherwise the bearing may damage or produce murmurs again.

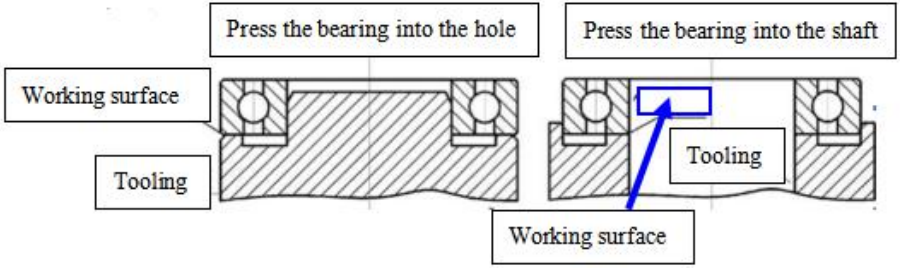

4. Principle of oil seal assembly

When the oil seal is replaced, a little anaerobic adhesive is applied to the surface of the A surface. The bottom B surface of the oil seal is a force surface. When the seal is knocked down, a uniform force should be guaranteed and a little butter is applied to the lip when the seal is replaced; especially, it should be noted that the oil seal spring should be checked to be intact when the oil seal is assembled.

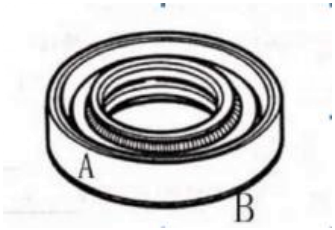

Discharge oil，fill oil

1. Discharge oil from gear box

Unscrew and remove gear box oil injection holes crew (shown no.1) and oil discharge screw (shown no.2), release oil (prepare suitable containers in advance to collect gear oil),screw the bolts and gaskets into place in time.

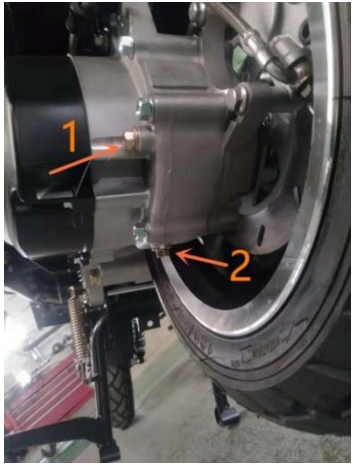

Reassembly attention:

(1). Rear gear box: add 180CC lubricating oil of 75W/80.

(2). Check whether there is damage and deformation of one gasket in each of the oil injection hole bolts and the oil discharge bolts, and replace them in time according to the situation.

(3).The tightening torque of theoil injection holes crew (shown no.1) and oil discharge screw (shown no.2) is 15-20Nm.

2. Discharge oil from crankcase

A. Remove the crankcase oil gauge (shown no.1) and the oil release bolt (shown no.2), release oil (prepare suitable containers in advance to collect gear oil), and put the oil gauge and bolt in place in time.

B. Remove the filter cover (shown no.3), remove the filter screen ((shown no.4), release oil , clean and check the filter, and put it back in place in time.

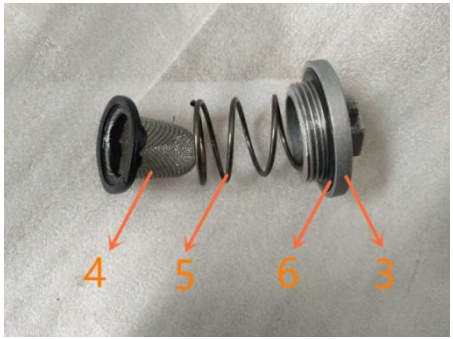

Reassembly attention:

(1). Crankcase: Add 1000CC lubricating oil of 10W/40，it is recommended to use the grade APL SJ above。

(2). When the filter screen (shown no.4) is is disassembled and assembled, check the parts no.3, no.4, no.5 and no.6 are fully loaded; otherwise it may damage the engine.

The tightening torque of the filter screen screw (shown no.2) is 33~38Nm.
The tightening torque of the pressure regulating valve screw (shown no.3) is 25~30Nm.

Disassembly and assembly of intake manifold

(1). Force the removal of the anti-disassembly nut (shown no.2).with the screwdriver. If it is not necessary, it is not recommended to remove the intake manifold.

(2). Remove nuts(shown no.1) and remove intake pipe connectors shown no.3)

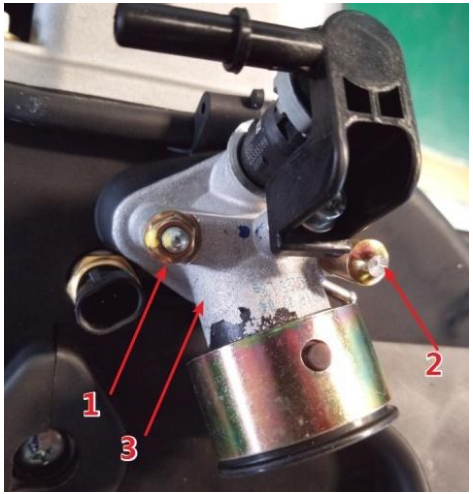

(3). Remove the paper pad (shown no.1), the bakelite pad (shown no.2), and the paper pad (shown no.1).

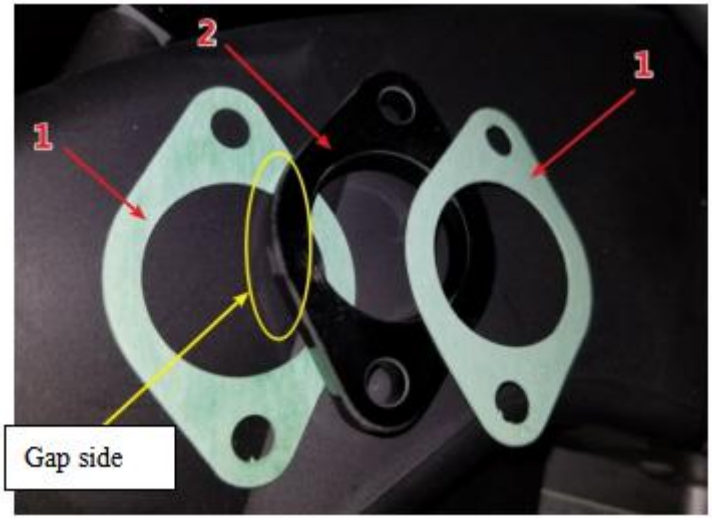

Reassembly attention:

According to the order of paper cushion-bakelite cushion-paper cushion, and ensure that the bakelite cushion has a gap side towards the cylinder head.

(4). Remove the cylinder temperature sensor. It is not recommended to demolish it if it is not necessary.

CAUTION Cylinder temperature sensor (shown no.1) is a high-precision object. It is strictly forbidden to knock or smash when disassembling or assembling.

Cylinder Temperature Sensor (shown no.3) Tightening Torque: 6 9Nm

Disassembly and assembly the fan cover and plastic parts

(1). Loosen and remove 5 screws, remove the fan cover.

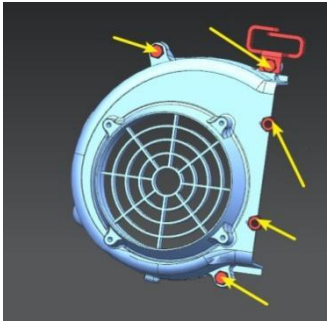

(2).Loosen and remove 5 screws, remove plastic A and B covers.

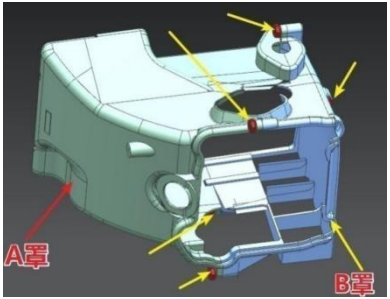

Disassembly and assembly the CVT cover

Remove 8 bolts ,then remove the left cover, gasket and positioning pin in turn.

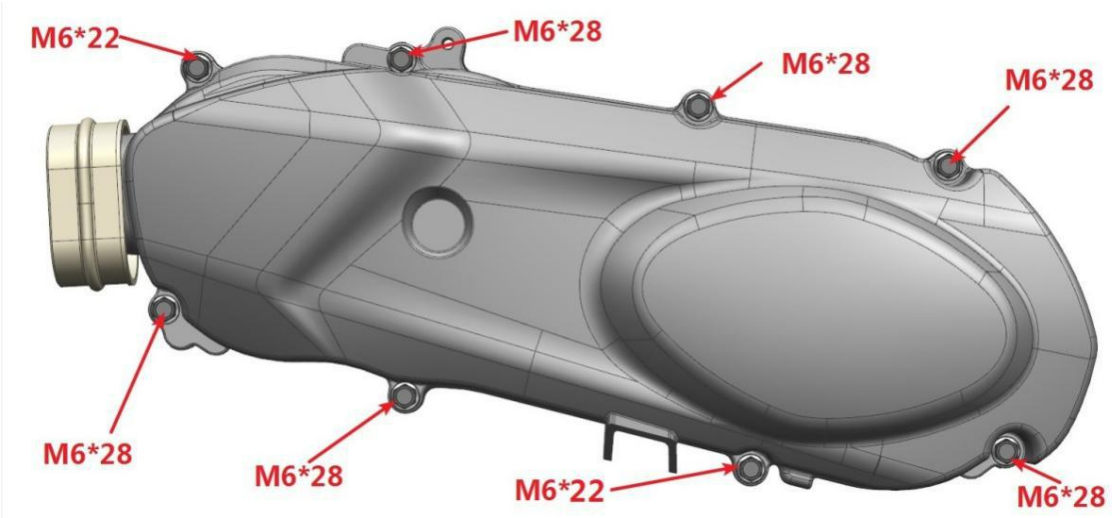

Disassemble front and back clutch

(1). Loosen and remove the nut （shown no.1），remove the retaining disc （shown no.2）.

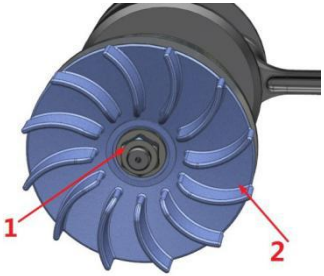

(2). Remove nuts (shown no.1), remove clutch driven wheel assembly (shown no. 2) and belt (shown no. 3)

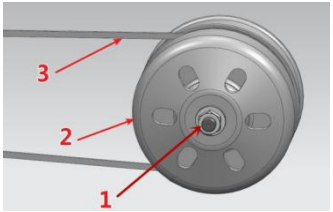

(3). Remove clutch drive wheel assembly (shown no.1) and bushing (shown no. 2)

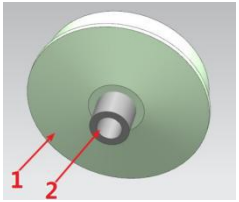

Reassembly attention:

(1) Use external force to rotate the driven wheel assembly counterclockwise, push the spring open, and then load the belt, otherwise it can not be assembled.

(2) Check and confirm that the sealing surface of clutch roller (Puli bead) is opposite to the direction of clutch rotation.

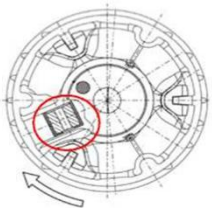

(2) Front clutch nut (Coated with Loctite 243 thread adhesive), tightening torque 60 ~ 70Nm.

Back clutch nut (Coated with Loctite 243 thread adhesive), tightening torque 60 ~ 70 Nm.

Disassembly and assembly the generator

(1) Remove four bolts (shown no.1) , remove the fan (shown no.2)

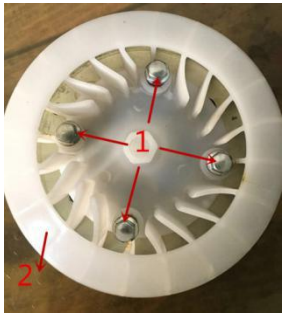

(2) Remove the flywheel nut (shown no.1) , remove the flywheel (shown no.2) with the special tool (shown no.3).

(3) Remove two bolts (shown no.1) , remove the pressure plate ((shown no.2); Remove two bolts (shown no.3) , remove the trigger (shown no. 4); Remove two bolts (shown no.5) , remove the generator stator (shown no.6).

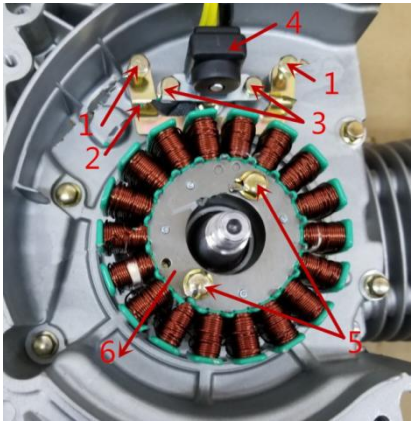

Reassembly attention:

(1) Special tooling detection trigger gap: 0.7±0.1mm.

(2) Gently tap the semicircle key with a copper hammer, and the upper plane is parallel to the center line of the crankshaft. The key slot on the rotor is aligned with the upper half key of the crankshaft.

(3) Flywheel nut coated with anaerobic thread locking glue, and the tightening torque is 60--70Nm.

(4) Four bolts tightening torque of fan: 8-12 Nm.

Disassembly and assembly the cylinder head

1. Remove 4 bolts and remove cylinder head

2. Remove two bolts and remove chain tensioner.

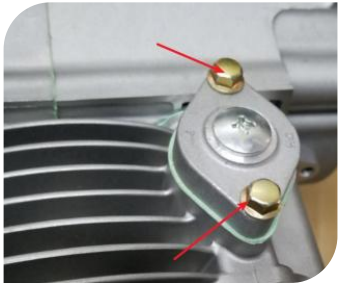

Reassembly attention:

(1) First remove the screw and O- ring of the tensioner(shown no.1).

(2) Rotate the key clockwise (shown no.2 or similar iron sheet) and return the tensioner jack rod from position A to position B before assembling, otherwise it can not be loaded.

(3) Tighten 2 bolts again.

(4) Re-confirm that the O-ring on the cross head screw is in good condition and tighten the screw(shown no.1).

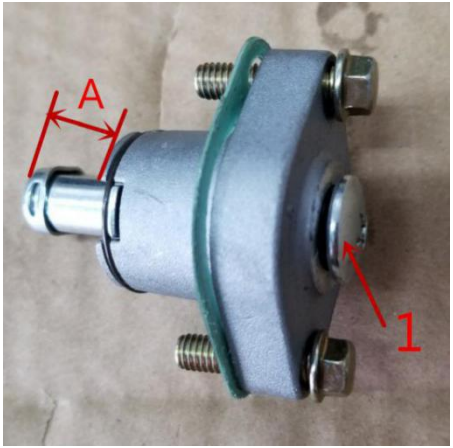

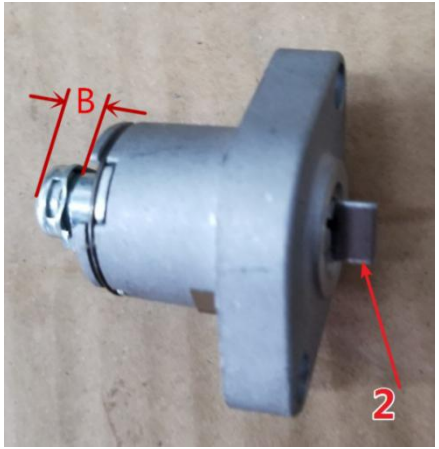

3. Remove 2 bolts (shown no.1), remove timing sprocket (shown no.2); remove 2 bolts (shown no.3) and 4 nuts with gaskets (shown no.5), and remove cylinder head (shown no.6).

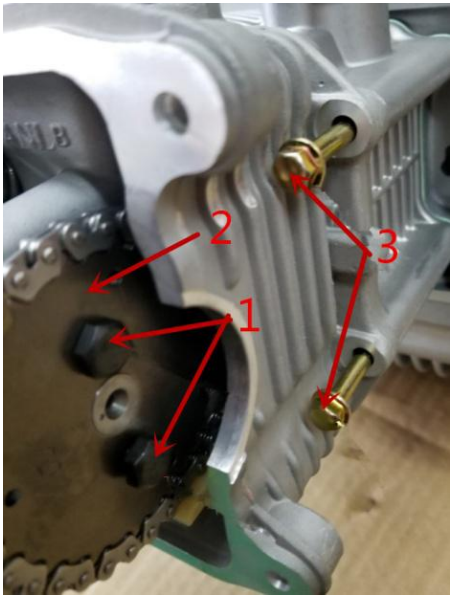

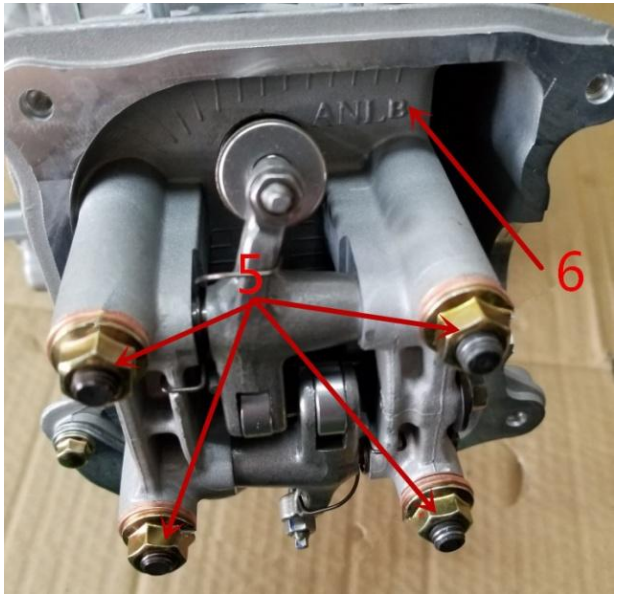

Reassembly attention:

(1) Four nuts on the cylinder head (shown no.5) tightening torque: 25-30Nm (diagonal tightening).

(2) When installing the cylinder head, ensure that two positioning pins and cylinder gaskets are put in.

(3) When assembling the exhaust rocker arm and the intake rocker arm, please ensure that they are in accordance with the disassembly. Otherwise, please readjust the clearance between the intake and exhaust valves (intake clearance: 0.12mm, exhaust clearance: 0.12mm).

(4) Installation of timing sprockets ensures that: ① the center line of the sprocket round hole is parallel to the cylinder surface and the marking is upward; ② the flywheel T-line is aligned with the "A" marking of the convex point on the right cover.

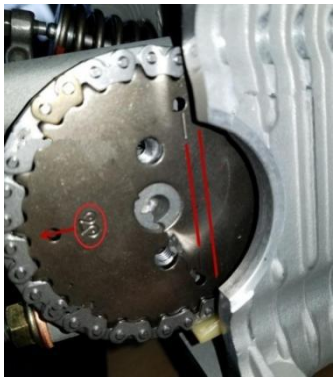

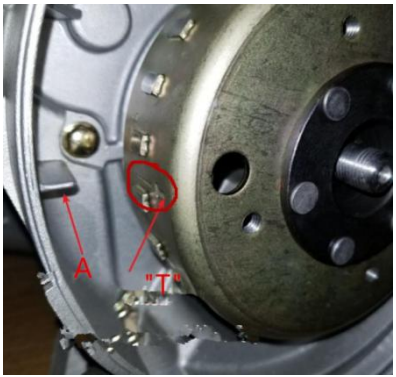

4. Cylinder head assembly disassembly and assembly: If necessary, disassembly and assembly are not recommended.

(1) Remove the positioning plate bolt (shown no.1), remove the positioning plate (shown no.4); remove the exhaust rocker shaft (shown no. 2) and the intake rocker shaft (shown no.3), remove the intake rocker arm (shown no.6) and rocker arm spring (shown no.8), exhaust rocker arm (shown no.7) and rocker arm spring (shown no.9); remove the camshaft (shown no.5).

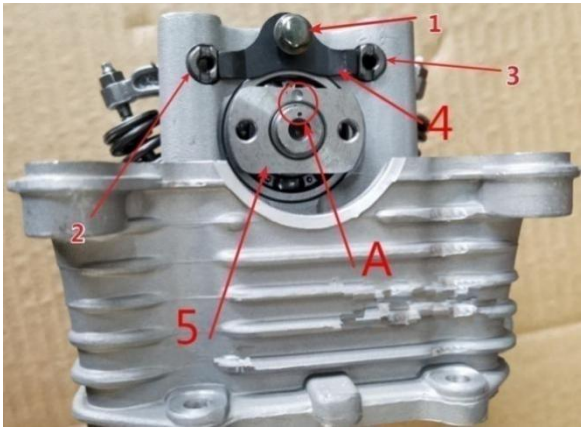

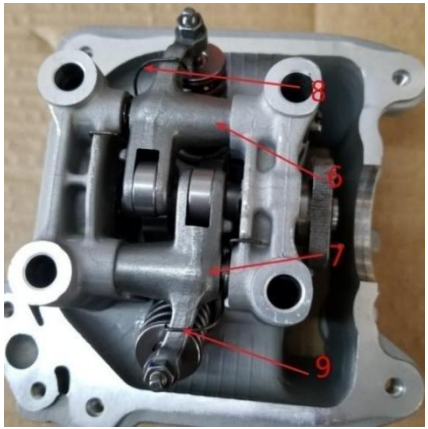

Reassembly attention:

(1) Camshaft (shown no. 5) Mark A upward.

(2) Remove the lock clamp of the intake valve with special tools (shown no. 11), remove the upper seat of the intake valve spring (shown no.12) and the intake valve spring (shown no.10); remove the lock clamp of the exhaust valve with special tools (shown no.14), remove the upper seat of the exhaust valve spring (shown no.15) and the exhaust valve spring (shown no.13).

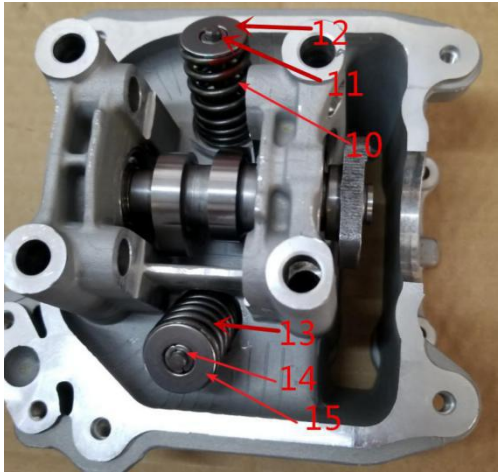

(3) Remove the intake valve (shown no.16) and exhaust valve (shown no.17), remove the valve oil seal (shown no.18) and valve spring seat (shown no.19).

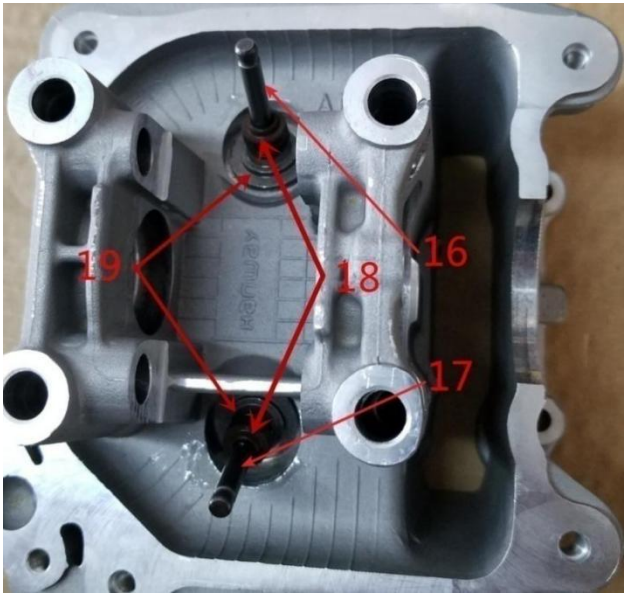

Reassembly attention:

A. If there is no burning oil in the valve oil seal, try not to remove it, otherwise it must be replaced after removal.

B. Valve umbrella seal face and cylinder head seal face clean up carbon deposit, visual inspection before assembly.

C. After assembling according to the above reverse process, the sealing of the valve seat must be tested. Gasoline is introduced into the intake and exhaust ports separately. Leakage can be observed from the intake and exhaust valve seats, but only through excessive leakage.

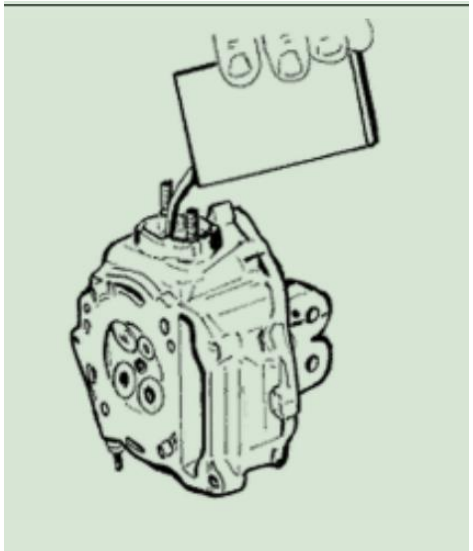

Disassembly of cylinder and piston

1.Remove the cylinder (shown no.7) and the seal pad (shown no.6).

2.Remove the retaining ring (shown no.3), remove the piston pin (shown no. 2) and remove the piston (shown no.1).

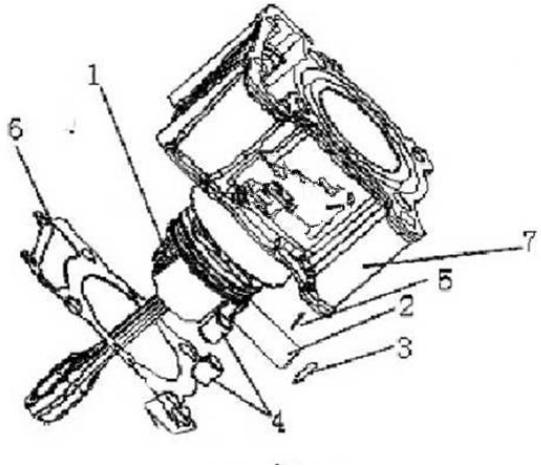

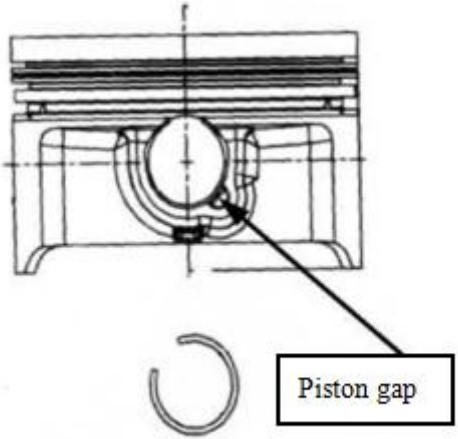

Reassembly attention:

(1). Routine installation: A little lubricant is applied to the parts before assembly.

(2). The piston pin should be missed out of the piston gap. The piston top arrow points to the exhaust direction.

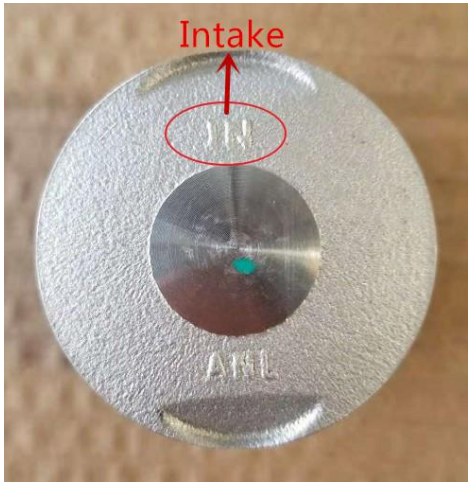

(3). If the seal pad (shown no.6) is damaged or soaked in oil, it needs to be replaced.

(4). If replacing the cylinder or / and piston, it must be replaced by the next table group:

Cylinder & piston diameter grouping				
Engine capacity	Grouping mark	Cylinder diameter	piston diameter	Tolerance clearance
125CC	Yellow	52.39～52.395	52.37～52.375	0.015～0.025
	Blue	52.395～52.4	52.375～52.38	0.015～0.025
	Green	52.4～52.405	52.38～52.385	0.015～0.025
150CC	Yellow	57.39～57.395	57.37～57.375	0.015～0.025
	Blue	57.395～57.4	57.375～57.38	0.015～0.025
	Green	57.4～57.405	57.38～57.385	0.015～0.025
180CC	Yellow	60.99～60.995	60.97～60.975	0.015～0.025
	Blue	60.995～61	60.975～60.98	0.015～0.025
	Green	61～61.005	60.98～60.9885	0.015～0.025

(6). The letter of the piston ring top ring and the second ring must point to the top of the piston, and the opening of each ring is stagger 90 degrees. See the following figure:

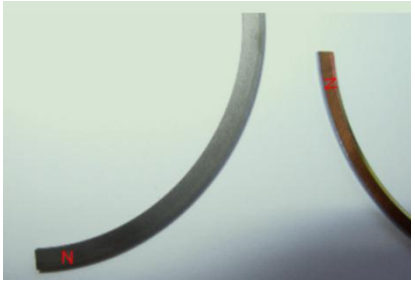

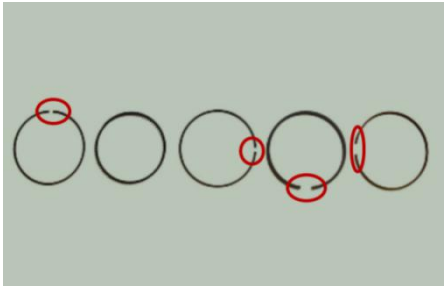

Disassembly of right cover

1.Remove two bolts (shown no.1 and shown no. 2) and remove the starting motor (shown no.3).

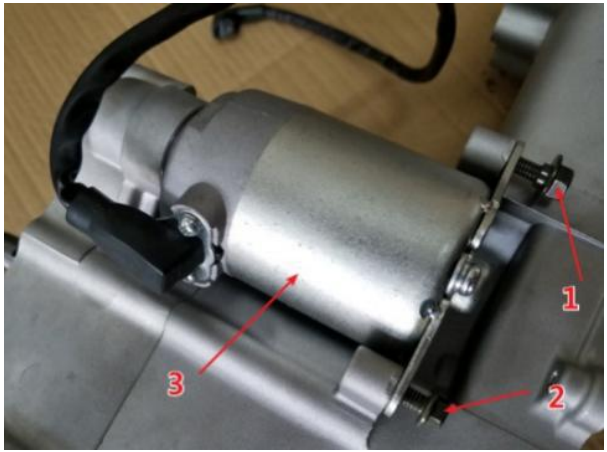

When reloading the motor, you must first put the motor on the bottom and then lock the bolt, otherwise the O-ring on the motor will be damaged.

2. Remove 10 bolts, remove right cover and seal gasket.

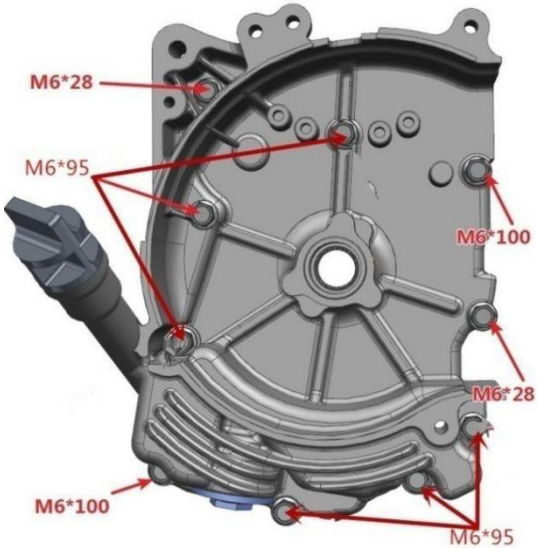

Reassembly attention:

(1) Check the sealing gasket and replace it in case of oil immersion, damage and folding.

(2) Check whether the positioning pin is on the right cover or the right box, and then place the sealing gasket.

3. Remove the four-groove nut clockwise (shown no.3), take down the gasket (shown no.4), the overrunning clutch body (shown no.5), the idler axle (shown no.1) and the idler wheel (shown no.2).

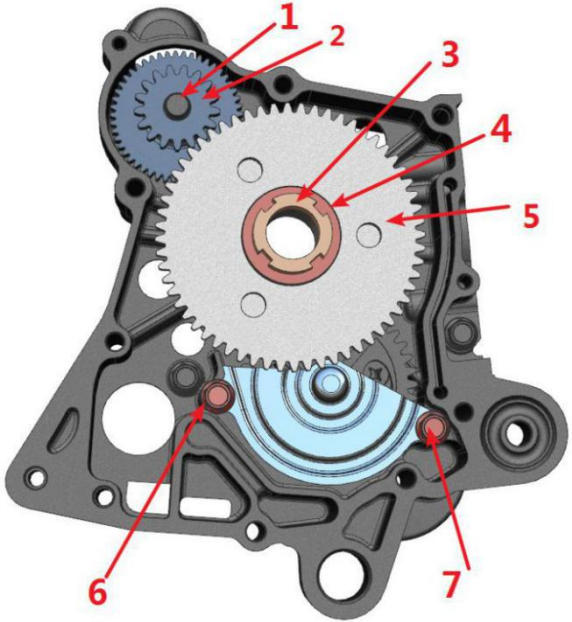

4. Remove two bolts (shown no.6), remove cover plate (shown no. 7), remove bolts (shown no. 1 and 2), and remove oil pump (shown no. 3)

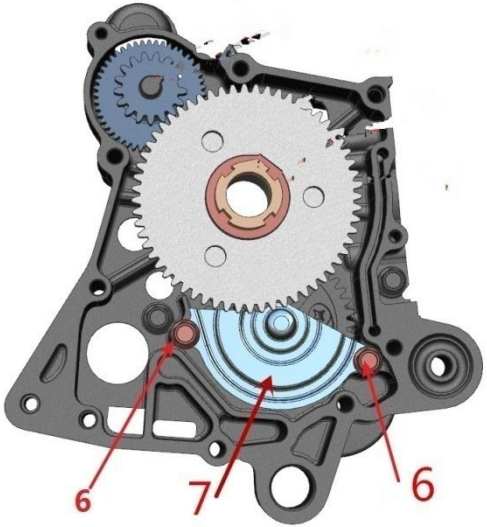

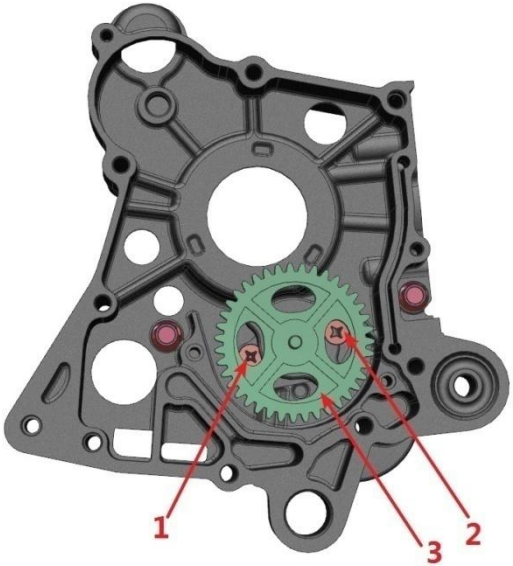

Disassembly of gearbox

1. Remove 7 gearbox bolts; Remove gear box cover、sealing pad and positioning pin.
   (Be careful that the gear chamber cover and internal gear fall off, a bolt can be left when disassembled)

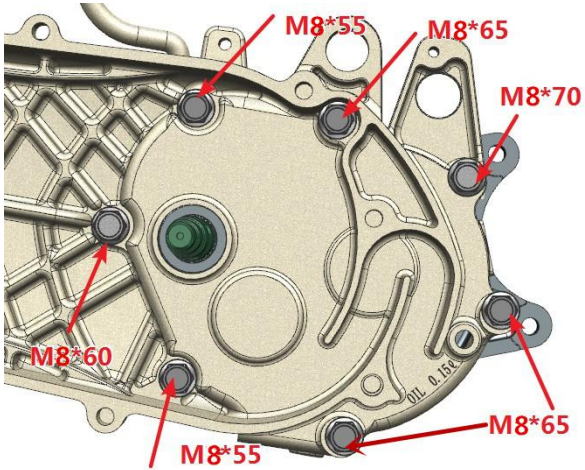

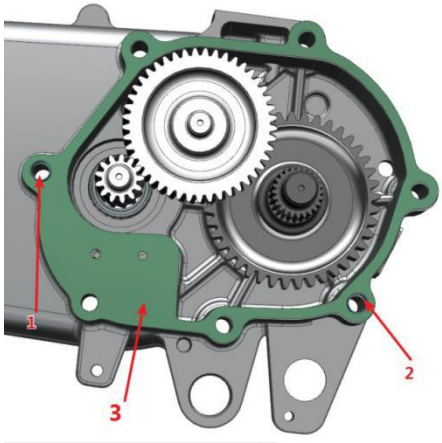

The bolt tightening torque is 25~30Nm when the gear housing cover is reinstalled.

2. Remove gears (shown no.1), shafts (shown no.2), and gears (shown no.3)

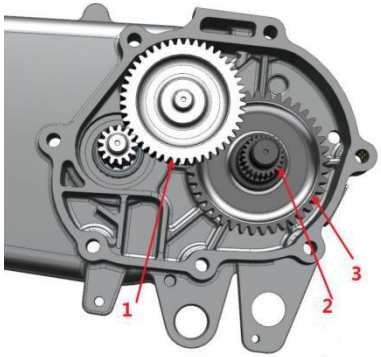

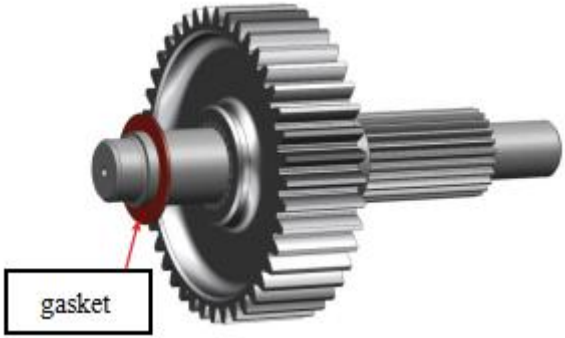

When reassembling, make sure that the positioning pin is loaded and the gasket is under gear 3.

3.The rear axle is fitted with interference. If it is not necessary, it is not recommended to dismantle it. Otherwise, the bearing will be damaged and special tooling will be needed for reassembly.

Reassembly attention:

(1) Check the sealing gasket and replace it in case of oil immersion, damage, folding, etc.

(2) Check whether the positioning pin is on the gear box cover or the left box body, and then place the sealing gasket.

Disassembly of crankshaft

1. Remove two bolts (shown no.1 and 2), tap the right box several times with nylon hammer, and remove the right box.

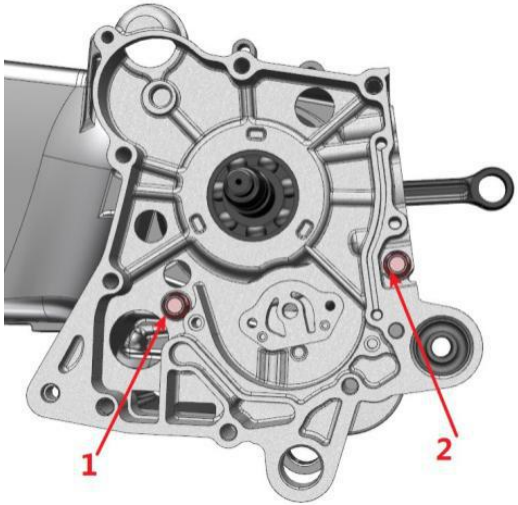

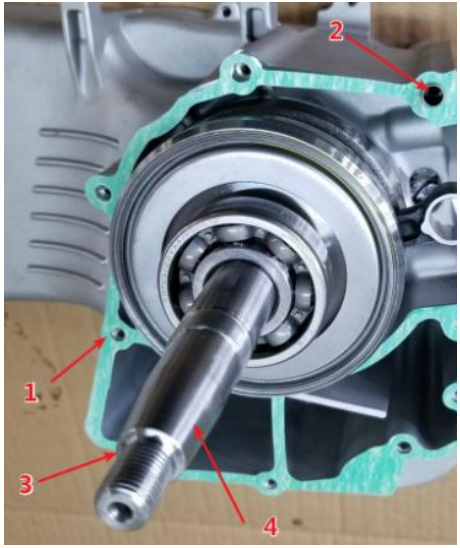

2. Tap left crankshaft with nylon hammer , remove crankshaft.

3. Remove the chain (shown no.1)

When reinstalling the crankshaft, insert the chain into the left box as much as possible to prevent the crankshaft from pressing into the chain.

Assembly:

1. Assemble according to the above reverse process.

2. Pay attention to lip protection when installing various oil seals: butter on inner ring.

3. Inspection of sealing gaskets, if oil immersion, damage, folding and other conditions must be replaced.

4. Check whether the positioning pin is on the cover or body of the box, and then place the sealing gasket.

3. Clean the surface lubricant after assembly, so as to avoid oil leakage.

EFI SYSTEM

The vehicle uses the DELPHI MT05 EFI system. The schematic diagram as follows:

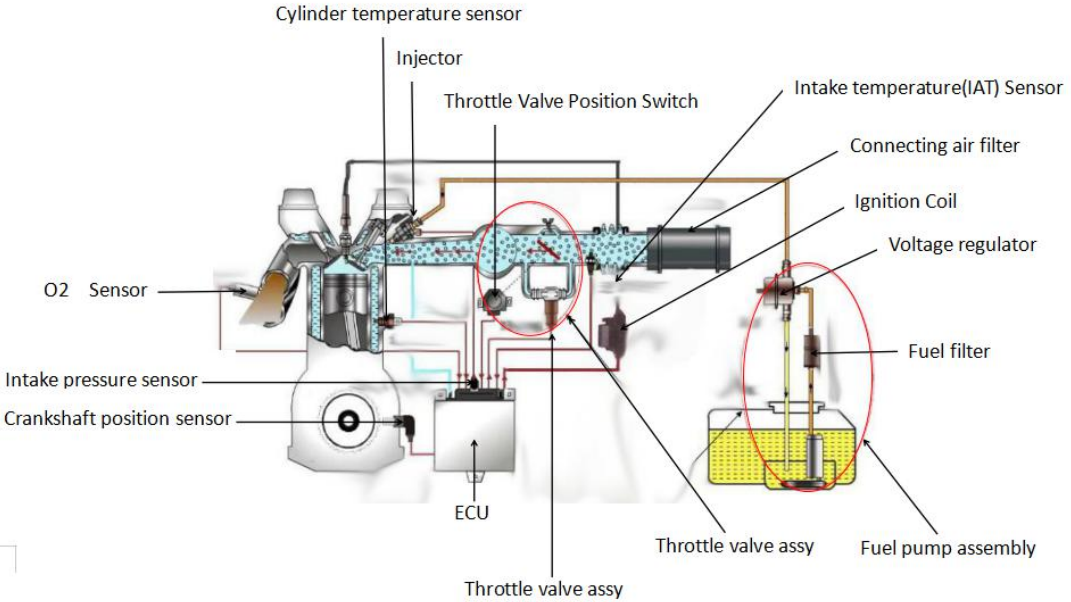

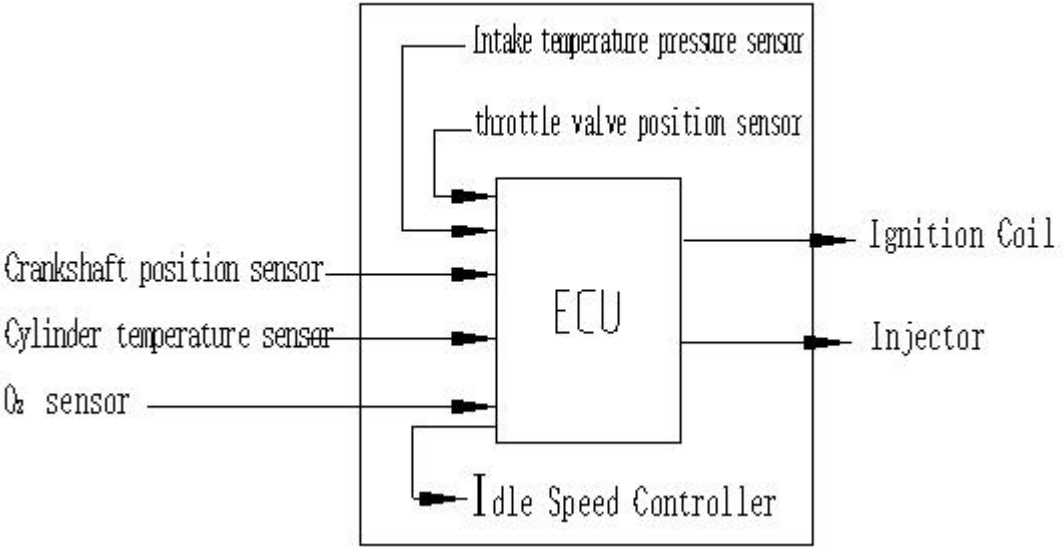

The fuel supply system consists of oil pump assy (including filter, pressure regulators), high-pressure oil pipe and injector.

The ignition system consists of ECU, high voltage coil, high voltage wire, spark plug cap and spark plug.

Maintenance instructions for EFI system

1. Special Notice: Please use the genuine parts; otherwise it will not be able to ensure the normal operation of the EFI system. Although the installation appearance size of EFI system is similar, the performance parameters are different.

2. Maintenance process attention (Important items, please read carefully).

① When disconnected and connected, the ignition switch must be switched off, otherwise it may damage the electrical appliances.

② The fuel injection pressure of the EFI system is high (about 250kPa), and all fuel pipelines are made of high pressure oil pipes. After the engine has stopped running for a long time, the fuel pressure in the oil circuit is also kept high. Therefore, do not remove the tubing easily during the maintenance process, and relieve the pressure of the fuel system before dismantling the tubing.

Pressure relief method：

- Lift the main stand.
- Disconnect the wiring harness of the oil pump assembly and the vehicle wiring harness connector.

- Start the engine until the engine is automatically extinguished, then switch the ignition key 2-3 times continuously, 3 seconds interval, then turn off the key switch.
- After complete above operation, the fuel pipe can be disassembled .when the fuel pipe was reinstalled, then the wiring harness connector of the oil pump assembly can reconnected.

③ When the fuel pump is removed from the fuel tank, do not turn on the electricity, so as to avoid producing electric sparks and causing fires.

④ Fuel pumps are not allowed to run tests under dry conditions or in water.

⑤ The regulation of idle speed is completely cured by the EFI system without manual adjustment. Throttle limit screw of throttle body has been adjusted when it is released from factory. It does not allow users to replace their initial position at will.

⑥ When the engine is running, dismantling the battery is not allowed.

OBD system introduction

Vehicle diagnostics system, referred to as OBD(On-Board Diagnostic). When the system fails, the fault light (MIL) or the engine (Check Engine) warning light is lit, The OBD system will save the fault information into the memory and read the related information in the form of a fault code through the standard diagnostic instrument and the diagnostic interface. According to the indication of the fault code, the maintenance personnel can quickly and accurately determine the nature and location of the fault.

1. Fault information record

The ECU continuously monitors sensors, actuators, related circuits, fault indicator lights and battery voltage, and even the ECU itself, and to the sensor output signal, actuator drive signal and internal signal (such as lambda closed loop control, cylinder temperature / coolant temperature, idle speed control and battery) Reliability detection is carried out by voltage control, etc.

Once a fault occurs in a link, or a signal is not trusted, the ECU immediately sets up a fault information record in the RAM's fault memory. The fault information record is stored in the form of a fault code. The fault code is called current

fault code; the transient fault caused by bad contact, and the current lost record is the history fault code; the fault has been excluded, but the code operation of the barrier code is also used in the history fault code. The form is stored in the fault memory.

2. Fault code table

MT05 Fault code table	
Fault code	description
P0107	MAP Circuit Low Voltage or Open
P0108	MAP Circuit High Voltage
P0112	IAT Circuit Low Voltage
P0113	IAT Circuit High Voltage or Open
P0117	Coolant/Oil Temperature Sensor Circuit Low Voltage
P0118	Coolant/Oil Temperature Sensor Circuit High Voltage or Open
P0122	TPS Circuit Low Voltage or Open
P0123	TPS Circuit High Voltage
P0131	O2S 1 Circuit Low Voltage
P0132	O2S 1 Circuit High Voltage

P0031	O2S Heater Circuit Low Voltage
P0032	O2S Heater Circuit High Voltage
P0201	Injector 1 Circuit Malfunction
P0202	Injector 2 Circuit Malfunction
P0230	FPR Coil Circuit Low Voltage or Open
P0232	FPR Coil Circuit High Voltage
P0336	CKP Sensor Noisy Signal
P0337	CKP Sensor No Signal
P0351	Cylinder 1 Ignition Coil Malfunction
P0352	Cylinder 2 Ignition Coil Malfunction
P0505	Idle Speed Control Error
P0562	System Voltage Low
P0563	System Voltage High
P0650	MIL Circuit Malfunction
P1693	Tachometer Circuit Low Voltage
P1694	Tachometer Circuit High Voltage

3. OBD fault indicator description and control

The fault indicator is generally an indicator light that can be displayed on the speedometer and the shape meets the requirements of the regulations.

The fault indicator described as follows:

① In the normal mode, no fault code:

Turn on the ignition switch, ECU initializes, the fault lights are on, and the MIL lights go out immediately after the engine starts successfully.

② When produce the fault code:

At the time of engine operation, if the fault occurs, the fault lamp is light on, which reminds drivers to have faults. When the engine is stopped, the fault will be stored in the ECU.

③ Have fault code:

Under the special situation, Can turn off the key and keep more than 10 seconds, and then fast continuous switch key 5 times to reset the ECU, the ECU reset will clear all self-learning data, after reset the vehicle may have some abnormal conditions. The ECU will need learning again to restore normal.

4. OBD diagnostic connect and use:

OBD diagnostic function: Read fault code, clear fault code, data flow display, status identification display, etc.

①Connect the diagnostic instrument to the diagnostic interface on the vehicle.

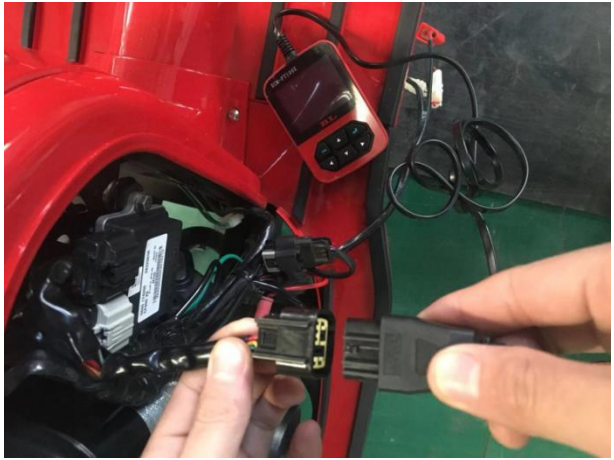

②Connect the ignition switch.

③Read fault code; Inquire maintenance manual to confirm the fault parts and types; formulate the maintenance plan according to the query information and experience.

④After troubleshooting, remove the history fault code with the fault diagnostic instrument.

5. According to the fault, the diagnosis process for maintenance

A. Before starting the of fault diagnosis according to the engine fault phenomenon, a preliminary examination should be carried out first.

①. Confirm that the engine fault indicator is working normally

②. Check with the fault diagnosis device to confirm that there is no fault information record.

③. Confirm the fault phenomenon of the owner's complaint and confirm the condition of the failure.

B. And then check appearance:

①. Check whether there is leakage in the fuel line；

②. Check whether the intake pipe is clogged, leaked, crushed or damaged.

③. Check whether the high voltage line of the ignition system is broken or aged.

④. Check whether the wire grounding is clean and firm.

⑤. Check whether all sensors and actuator joints are loose or poorly contacted.

Important note: if the above phenomenon exists, the maintenance work should be carried out according to the fault phenomenon, otherwise the fault diagnosis and maintenance work will be affected.

6. Common fault:

(1). When starting, the engine does not turn or turn slowly.

General fault parts: 1, battery; 2, starting motor; 3, wiring harness or starting relay and related control circuit; 4, engine mechanical parts.

General diagnosis process:

No.	Inspection steps	Follow steps
1	when the engine start，Check the voltage between the two terminals of the battery with multimeter，whether there is about 9-12V.	Replace battery
2	Ignition switch keep at the starting position, use multimeter to check the positive terminal of starter motor whether have more than 9V voltage.	Check starting motor related lines
3	Remove starter motor and check starting motor's working condition. The key is to check whether there is a circuit breakage or stuck due to poor lubrication.	Repair or replace the starting motor
4	If the fault occurs only in winter, then check the engine oil choose whether right, cause the resistance of starting motor is too high.	Replace appropriate lubricating oil
5	Check whether the internal mechanical resistance of the engine was too large, and whether the transmission system was working normally.	Inspect the internal of engine

(2). When starting, the engine can be towed but cannot start successfully.

General fault parts:1, fuel tank without oil; 2, fuel pump; 3, speed sensor; 4, ignition coil; 5, engine mechanical parts.

General diagnosis process:

No.	Inspection steps	Follow steps
1	Connect the OBD diagnostic, observe the data items of the engine speed, start engine, and observe whether there is a speed signal output.	Inspect speed sensor circuit and speed sensor
2	Remove the spark plug cap, connect the spark plug, let the spark plug on the engine block, start the engine, check whether there was continuous blue and white high pressure fire.	Inspect ignition system
3	Connect the fuel pressure gauge, turn on the key switch and check whether the fuel pressure was around 250KPa. If there was no fuel pressure gauge, can pinch the high pressure oil pipe by hand, judge the hardness.	Inspect fuel system
4	Check the pressure of the engine cylinder and observe whether there is insufficient pressure in the engine cylinder.	Exclude engine mechanical failure (pay attention to check whether engine valve clearance is too small).

5	Remove the injector from the intake pipe (the oil circuit and wiring harness connector is not removed), start the engine and check whether there is fuel injection.	Inspect injector circuit, injector

(3). Start difficulty

General fault parts: 1, fuel has water; 2, fuel pump; 3, coolant temperature sensor; 4, injector; 5, ignition coil; 6, throttle body and idle bypass airway; 7, inlet; 8, ignition timing; 9, spark plug; 10, engine mechanical part.

General diagnosis process:

No.	Inspection steps	Follow steps
1	Remove the coolant temperature (cylinder head temperature) sensor connector and start the engine to see if the engine has started successfully.	Inspect circuit or replace coolant temperature (cylinder head temperature) sensor
2	Connect the fuel pressure gauge, turn on the key switch and check whether the fuel pressure was around 250kPa. If there was no fuel pressure gauge, can pinch the high pressure oil pipe by hand, judge the hardness.	Inspect fuel system

3	Remove the spark plug cap, connect the spark plug, let the spark plug on the engine block, start the engine, check whether there was continuous blue and white high pressure fire.	Inspect ignition system
4	Softly turning throttle, observe whether easy to start.	Cleaning throttle and idle airways
5	Check whether the air filter is clogged, and whether there is a leak in the intake port (especially the intake pipe connection).	Inspect intake system
6	Check spark plug and observe the type and clearance	adjust or replace
7	Check engine cylinder pressure to see if there is insufficient cylinder pressure.	Exclude engine mechanical failure (pay attention to check whether engine valve clearance is too small).
8	Check whether the fuel label (and whether it contains ethanol) meets the requirements of the vehicle.	replace fuel

(4). Starting normal, but idle speed unstable.

General fault parts:1, fuel has water; 2, fuel injector; 3, spark plug; 4, throttle body and idle bypass airway; 5, Intake port; 6, idle speed regulator; 7, ignition timing; 8, spark plug; 9, engine mechanical part; 10, coolant temperature (cylinder temperature) sensor.

General diagnosis process:

No.	Inspection steps	Follow steps	Remark
1	Check whether the air filter is clogged, and whether there is air leakage in the intake system.	Inspect intake system	
2	Check if the throttle is stuck.	Cleaning or replacing	
3	Check spark plug and observe the type and clearance	adjust or replace	
4	Check whether there is carbon deposition in throttle body and idle bypass.	Cleaning	
5	Check whether the fuel label (and whether it contains ethanol) meets the requirements of the vehicle.	replace fuel	

6	Check engine cylinder pressure to see if there is insufficient cylinder pressure.	Exclude engine mechanical failure (pay attention to check whether engine valve clearance is too small).	
7	Check the ignition sequence and ignition timing of the engine.	Inspect ignition timing	
8	Check whether there is leakage, blockage or excessive flow in fuel injector.	replace	
9	Remove the coolant temperature sensor connector and start the engine, observe whether the idle is stable during the engine warm-up process.	Inspect the circuit or replace the sensor	Idling instability during the warm up process

(5). starting normal, but idle speed too high.

General fault parts::1, throttle body and idle bypass air duct; 2, idle speed regulator; 3, coolant temperature sensor; 4, Ignition timing.

General diagnosis process:

No.	Inspection steps	Follow steps
1	Check whether the throttle cable is stuck or too tight, resulting in the throttle valve not completely closed.	adjustment
2	Check whether there is air leakage in the intake system.	Inspect intake system
3	The idle speed regulator is removed to check whether there is carbon deposition in throttle body, idle speed regulator and idle bypass.	Cleaning the related parts
4	Remove the coolant temperature sensor connector and start the engine, observe whether the idle is too high	Inspect the circuit or replace the sensor
5	Check whether the ignition timing of the engine meets the specifications.	Inspect ignition timing

(6). When accelerate, the engine speed won't go to up, or flameout. Reaction slowly. Acceleration performance weak

General fault parts: 1, fuel has water; 2, intake pressure sensor and throttle position sensor; 3, spark plug; 4, throttle body and idle bypass airway; 5, Intake port; 6, idle speed regulator; 7, injector; 8, ignition timing; 9, exhaust pipe.

General diagnosis process:：

No.	Inspection steps	Follow steps	Remark
1	Check whether the air filter is blocked.	Inspect intake system	
2	Connect the fuel pressure gauge and start the engine to check whether the fuel pressure of the engine is around 250kPa at all working conditions.	Inspect fuel system	
3	Check spark plug and observe the type and clearance	adjust or replace	
4	The idle speed regulator is removed to check whether there is carbon deposition in throttle body, idle speed regulator and idle bypass.	Cleaning the related parts	
5	Check whether the ECU unit and its circuit are normal.	Inspect the circuit or replace the ECU assembly	
6	Check whether there is leakage or blockage in the injector.	replace	
7	Check whether the fuel label (and whether it contains ethanol) meets the requirements of the vehicle.	replace fuel	

8	Check the ignition sequence and ignition timing of the engine.	Inspect ignition timing	
9	Check whether the exhaust pipe is smooth.	Repair or replace the exhaust pipe	
10	Remove the spark plug cap, connect the spark plug, let the spark plug on the engine block, start the engine, check whether there was continuous blue and white high pressure fire.	Inspect ignition system	
11	Check whether there are clutch slipping, low tire pressure, braking delay, and whether the user adjusted the last stage transmission ratio.	Repair	acceleration performance weak

Fuel injector disassembly and installation

1. Remove left and right cover.

2. The two fingers press the quick connector (shown no.2) at the same time, pull out the quick connector.

3.Disconnect the injector connector plug (shown no.3).

4. Remove the bolt (shown no.4).and take off the fuel injector(shown no.1).

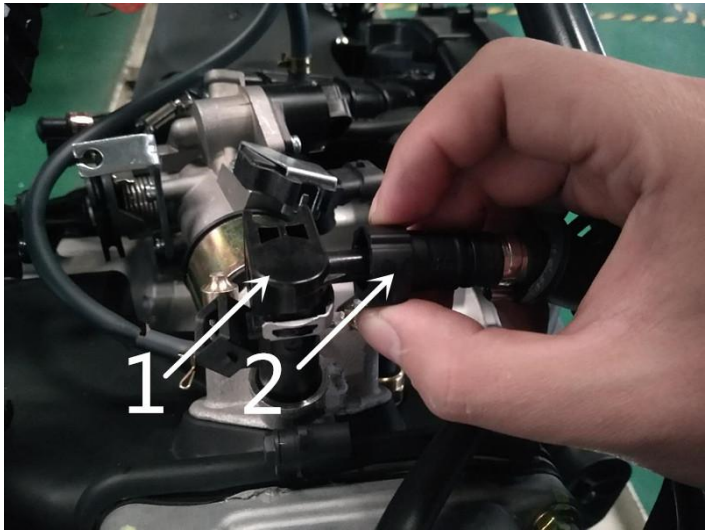

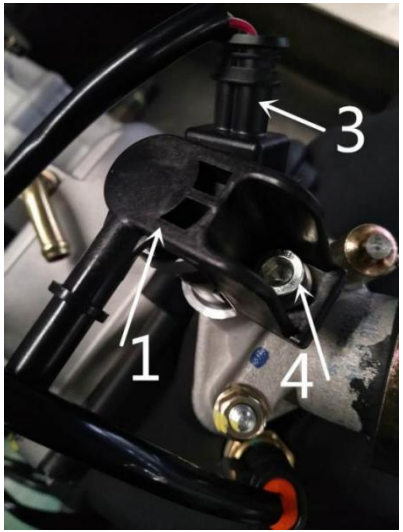

5. Assembly according to the above reverse process.

Throttle valve disassembly and installation

1. Remove left and right cover.
2. Disconnect intake pressure/temperature sensor (shown no.1), throttle position sensor (shown no.2), idle stepping motor (shown no.3);

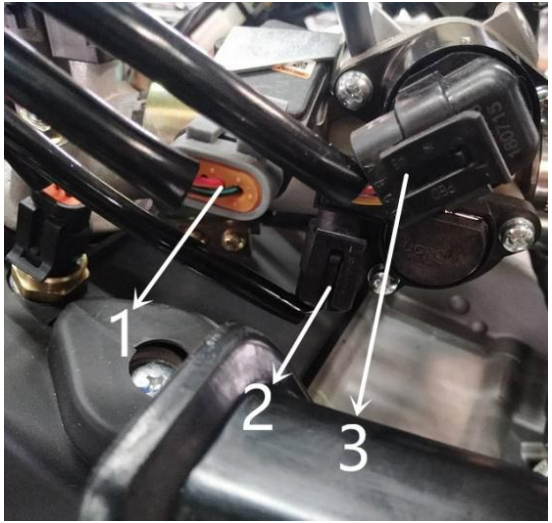

3. Release the nut (shown no.5) from the thread and remove the throttle line (shown no.6)

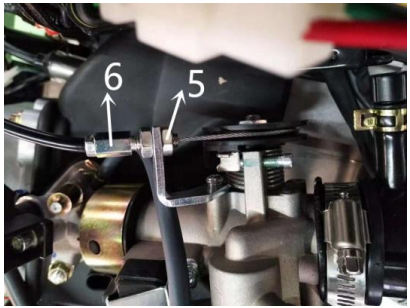

4.Release the clamp (shown no.5), separating air filter outlet pipe (shown no. 6).

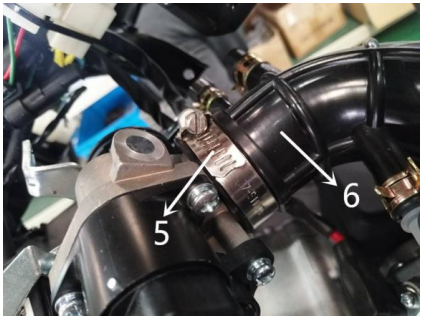

5. Remove the throttle body by loosening two bolts (shown no.4).

6. Assembly according to the above reverse process.

BRAKING SYSTEM

Assemble ABS brake system or CBS brake system according to sales area or customer requirement.

ABS brake system

If vehicle is equipped with ABS brake system: a front disc brake, a rear disc brake, and ABS integrated unit, front and rear all equiped with counting gear disc and Hall sensor, clearance between 0.5-1.6 mm.

Operate the right brake handle and apply pressure on the front brake caliper.

Operate the left brake handle and apply pressure on the rear brake caliper.

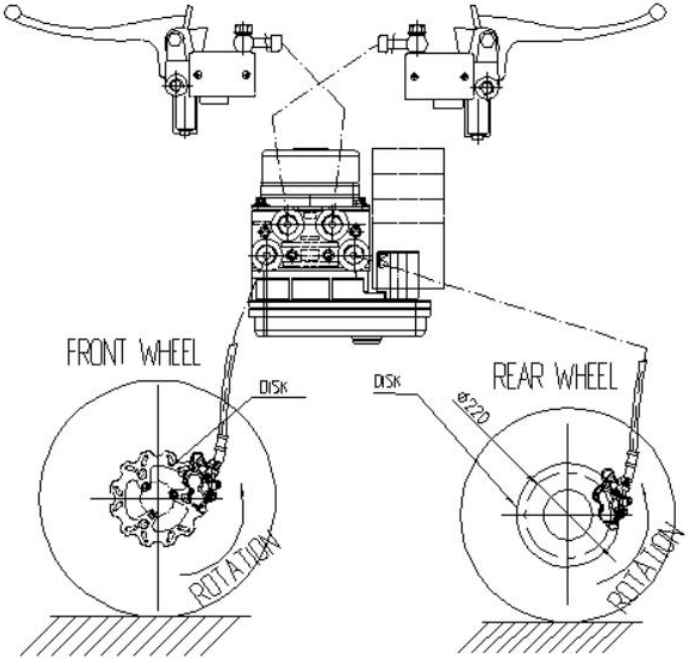
FRONT WHEEL
DISK
ROTATION
DISK
REAR WHEEL
ø220
ROTATION

CBS brake system

If vehicle is equipped with CBS brake system: a front disc brake, a rear disc brake, and CBS integrated unit.

Operate the right brake handle and apply pressure on the front brake caliper.

Operate the left brake handle and apply pressure on the rear brake caliper.

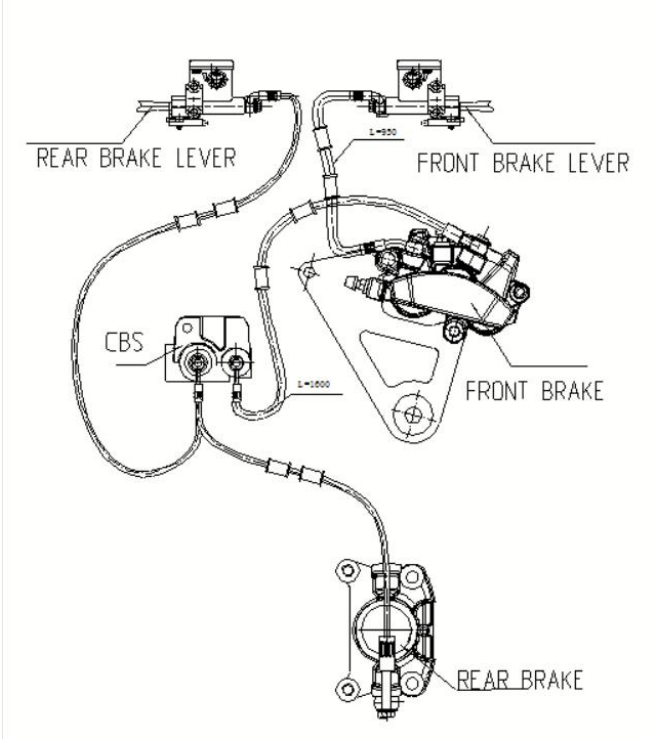
REAR BRAKE LEVER
FRONT BRAKE LEVER
CBS
FRONT BRAKE
REAR BRAKE

Dismantle front brake calipers and brake disc

1. First lift the main stand, then unscrew and remove the bolt (shown no.1). The tightening torque M8 is 25Nm.

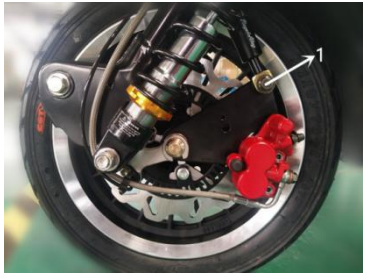

2. Unscrew and remove the front wheel bolt (shown no.2).Take down the front wheel. The tightening torque M12 is 60Nm.

3. Use the strap (shown no.3) to pull up the bushing widget to prevent loss, unscrew and remove the 3 bolts (shown no.4), remove the brake disc (shown a) and the front ring gear (shown b).

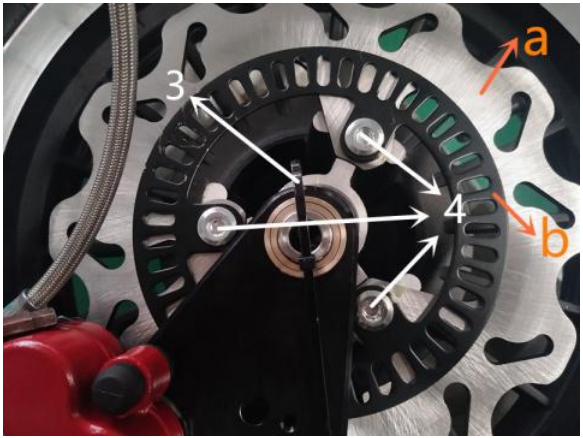

⚠ CAUTION When reassembling, the bolt thread part of Figure 4 is coated with Loctite 243 thread adhesive, and the tightening torque M8 is 25Nm.

4. Unscrew and remove 2 nuts and 2 built-in bolts (shown no.5), unscrew and remove the bolts (shown no.6).

5. Take down the 2 pads (shown no.7).

CAUTION Do not operate the brake lever after removing the friction hoof, otherwise the piston will come out of the caliper to cause the leakage of brake fluid.

6. Inspection and replacement of the pad and brake discs are described in part Ⅲ.

CAUTION Reassembly is carried out according to the above reverse process.

7. Remove the ABS system sensor (shown no.1); CBS system does not have the counter (shown no.2) and sensor (shown no.1), the others are the same.

Dismantle rear brake calipers and brake disc

1. Lift the vehicle main stand, unscrew and remove the 3 screws on the right side cover (shown no.1), remove the right side cover (shown no.2).

2. Unscrew and remove the bolt (shown no.1、shown no.2)

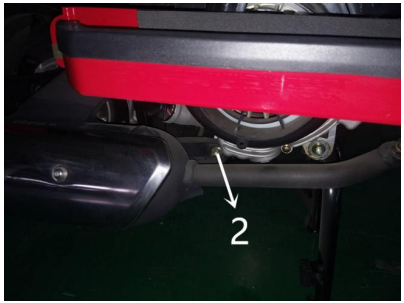

3.Disconnect the oxygen sensor plug (shown no.3).

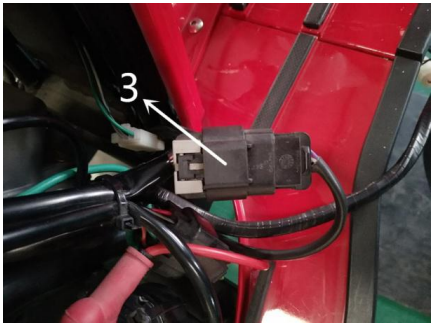

4. Remove two fixed nuts of muffler on cylinder head (shown no5) and remove muffler (shown no. 6).

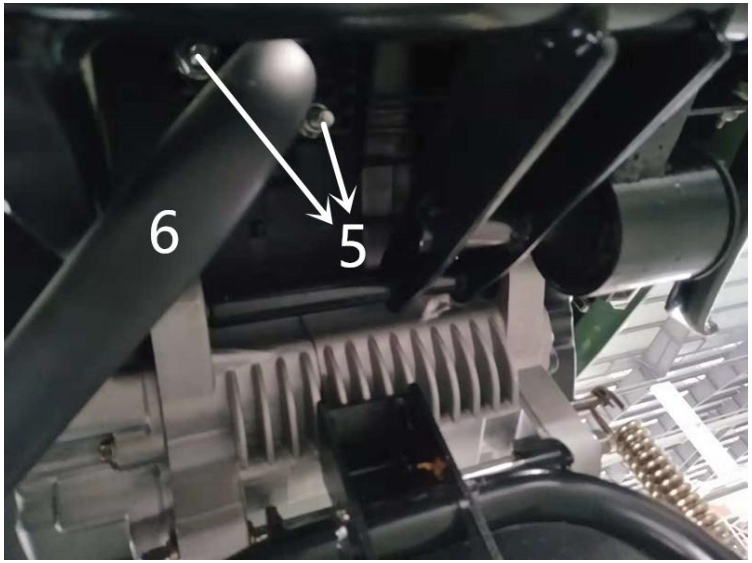

5. Hold the left brake lever (shown no.3), unscrew and remove the 5 bolts (shown no.1) , remove the rear wheel (shown no.2).

⚠ CAUTION When reassembling, the bolt thread part of Figure 1 is coated with Loctite 243 thread adhesive, and the tightening torque is 60Nm.

6. Hold the left brake lever (shown no.3), unscrew and remove the nut (shown no.7) , unscrew and remove the tubing clamp bolt (shown no.4) 、two caliper fixing bolts (shown no.5),take off the brake pump (shown no.6) and the brake disc (shown no.8)

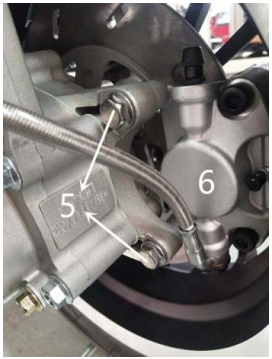

Reassembly attention:

The nut thread part of Figure 7 is coated with Loctite 243 thread adhesive, and the tightening torque is 100Nm.

Caliper fixing M8bolts tightening torque is 25Nm.

7. Remove the clip (shown no.18), pull out the pin shaft (shown no.19), take off the spring leaf (shown no.20), and pay attention to the spring leaf (shown no.20) in accordance with the direction of the picture.

8.Take off the brake pad (shown no.21).

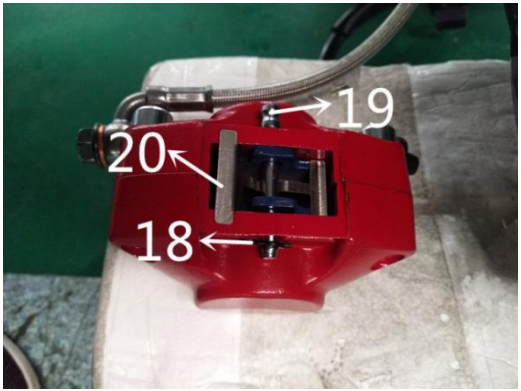

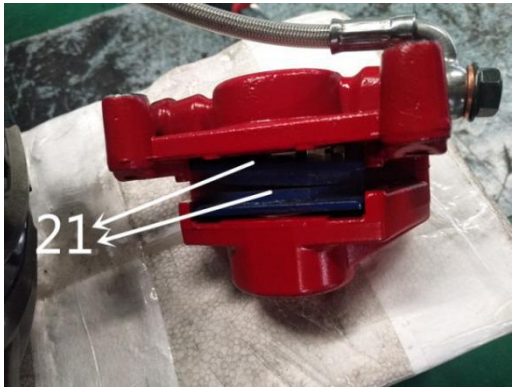

⚠ CAUTION Do not operate the brake lever after removing the friction hoof, otherwise the piston will come out of the caliper to cause the leakage of brake fluid.

9. Inspection and replacement of pad and brake disc are described in part Ⅲ.

CAUTION Reassembly is carried out according to the above reverse process.

10. Remove the ABS system sensor (shown no.3); CBS system does not have the counter (shown no.4) and sensor (shown no.3), the others are the same.

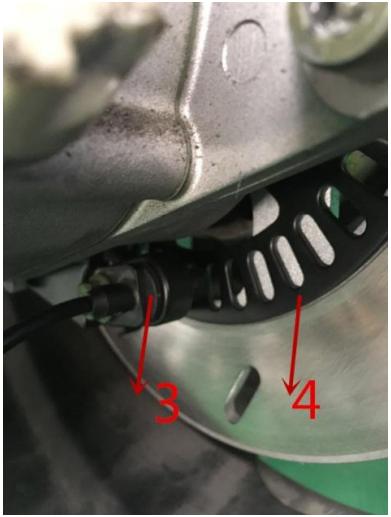

Inspection of front and rear pad and brake disc

1. Brake disc inspection and replacement

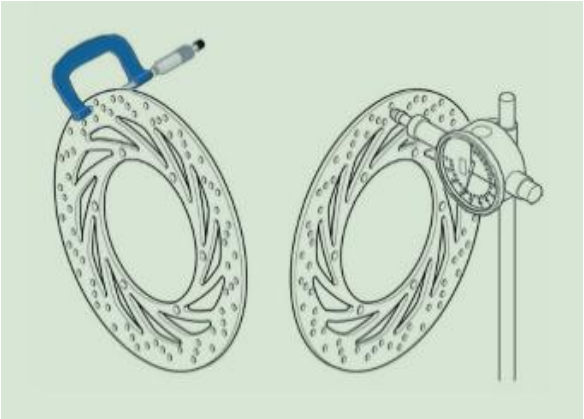

(1). Perform visual inspection on the surface and replace it if there is serious scratch or rust.

(2). Use micrometer to measure the thickness on the brake disc circumference. If the minimum thickness is less than or near the minimum limit (3.6mm), replace it.

(3). Use the dial gauge to measure the beating of the brake disc. If it exceeds the tolerance limit (0.3mm), replace it.

2. Brake pad inspection and replacement

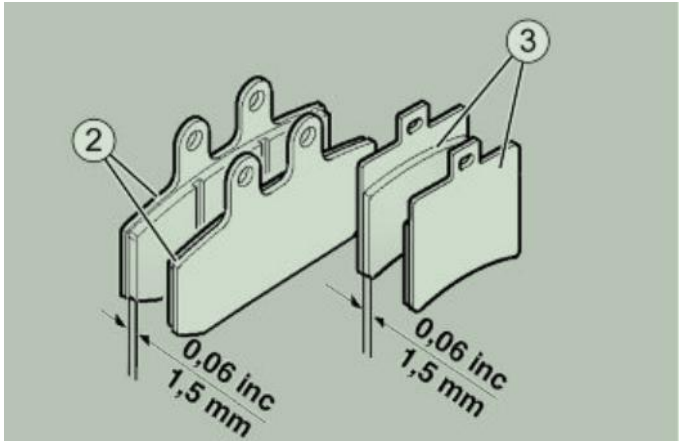

(1)Figure 2 is front brake pad; Figure 3 is rear brake pad.

(2)The thickness of the pad material is measured with a vernier depth caliper (shown no.2 and no.3). As long as the material thickness of one pad is reduced to 1.5mm, need to replace two pads at the same time.

Clear the brake fluid loop bubble.

Taking the dangers of vehicles and riders into account, it is necessary to remove bubbles in the brake fluid circuit after retrofitting or restoring the brake system.

1. Front brake fluid circuit

(1). Pull out the rubber cap of the vent valve (shown no.1).

(2). A clear plastic pipe (shown no.3) is inserted on the vent valve (shown no.2), and the other end of the tube (shown no.3) is connected to a container for collecting the discharged brake fluid.

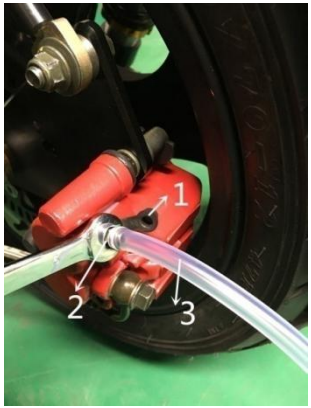

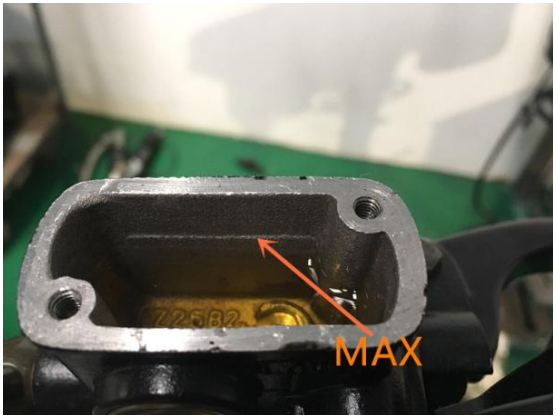

3). Quickly compress and loosen the right brake lever several times, then press hard on the right brake lever.

(4). Loose the valve (shown no.2) about 1/4 circle to allow the brake fluid to flow into the container. Release the pressure on the brake lever until the end of the stroke.

(5)Repeat the above operation until there is no bubble in the brake fluid entering the container.

⚠ CAUTION In the process of operation, always check the liquid level of the brake fluid in the pump storage chamber, add it in time, and do not drain, otherwise there will be bubbles in the pipeline.

(6)Tighten the vent valve (shown no.2) and remove the pipe (shown no.3) and install the bleed valve rubber cap (shown no. 1).

(7)Add the brake fluid to the "MAX" scale line in the upper pump.

2. Rear brake fluid circuit

The clearance process is the same as front brake fluid circuit.

Brake fluid replacement

1. Front brake fluid replacement

(1). Pull out the rubber cap of the vent valve (shown no.1).

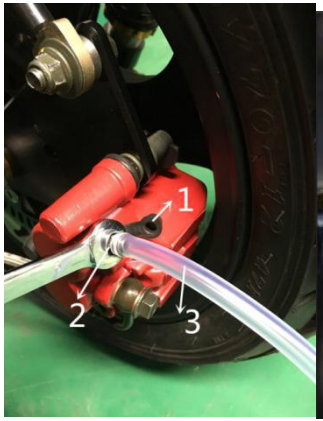

(2). A clear plastic pipe (shown no.3) is inserted on the vent valve (shown no.2), and the other end of the tube (shown no.3) is connected to a container for collecting the discharged brake fluid.

(3). Quickly compress and loosen the right brake lever several times, then press hard on the right brake lever.

(4). Loose the valve about one circle to allow the brake fluid to flow into the container. Release the pressure on the brake lever until the end of the stroke.

(5). Always check the liquid level of the pump storage chamber. If it is lower than the "LOWER" mark, turn off the bleed valve (shown no.2).

⚠ CAUTION In the process of operation, always check the liquid level of the brake fluid in the pump storage chamber, add it in time, and do not drain, otherwise there will be bubbles in the pipeline.

(6). Add brake fluid to the "MAX" above scale of the tank.

(7). Repeat steps (3) (4) (5) (6).

(8). Observe the liquid in the transparent plastic pipe. When the color of the liquid is replaced from black to clear, tighten the discharge valve (shown no.2) and remove the pipe (shown no.3).

(9). Install the rubber cap of the vent valve (shown no.1).

(10). Add the brake fluid to the "MAX" scale line in the pump storage chamber.

2. Rear brake fluid replacement

The replace process is the same as front brake fluid.

FINAL INSPECTION

After Vehicle maintenance, before the normal riding, the following checks shall be carried out.

Appearance check

1. The paint surface of a leaking part

2. Assembly of plastic parts with external leakage

3. Scratch

Tightening torque check

1. Front and Rear suspending device

2. Front and Rear brake calipers, brake discs

3. Front and Rear wheels and wheel shafts

4. Connection between engine and frame

5. Handlebar, steering mechanism

6. Plastic parts fastening

Electrical system

First check the battery positive and negative, then check following

1. Key switch

2. Head light: High beam, low beam, position light and warning light

3. Adjust the low beam according regulations.

4. Front & rear brake switch and stop lamp

5. Direction switch and turning lamp

6. Instrument Panel Indications

7. Horn

8. Starting motor

9. The function of engine emergency stop switch and side stand switch

Liquid level check

1. Hydraulic brake system level

2. Engine coolant liquid level

3. Engine oil level

4. Engine gear oil level

Vehicle road check

1. Vehicle cold start

2. Instrument panel operation

3. The sensitivity of throttle control

4. Stability of acceleration and brake

5. Front and Rear brake effect

6. Front and Rear shock absorption effect

7. Is there any abnormal noise

Inspection of vehicles after driving

1. Vehicle hot start

2. Brake rod stroke

3. Front and Rear tyre pressure

4. Angle of rear view mirror

5. Radiator fan run

6. Possible leaks

7. Abnormal sound of engine

When the above check is completed, the user can ride normally.

A real classic

GP125i/150i/180i
Maintenance Manual

Royal Alloy
www.royalalloy.com